Installation, Operation & Maintenance Manual
Two Post Surface Mounted Lift

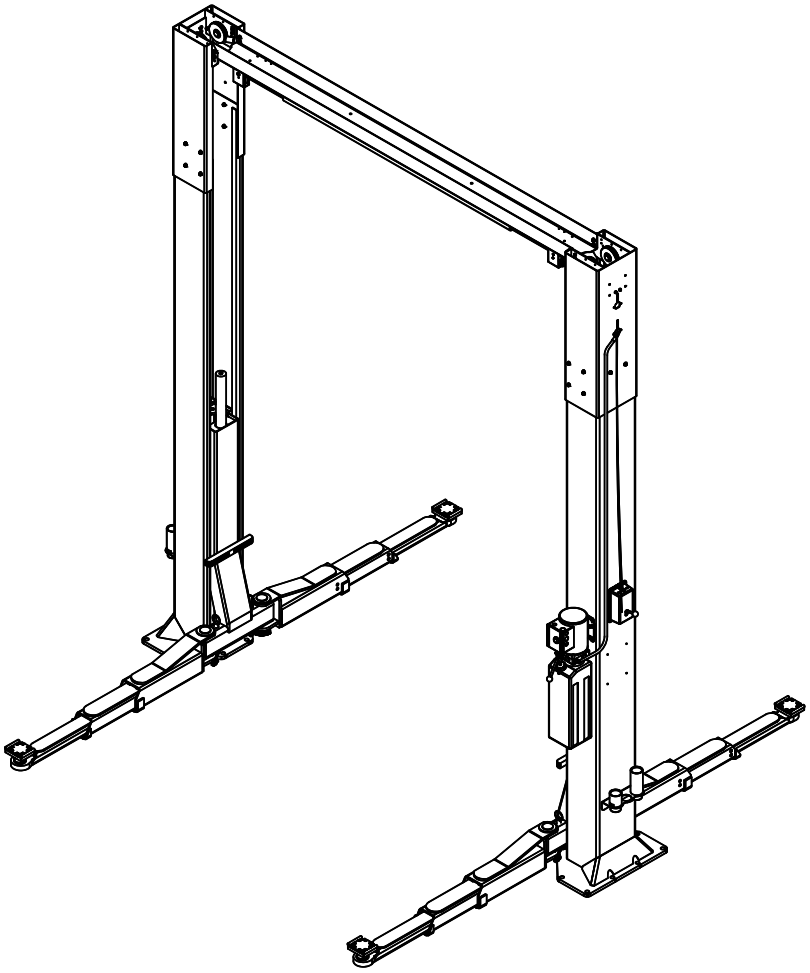

MODELS: CL12A
CL12A-QC

12,000 LBS. CAPACITY
3000 LBS. PER ARM

2311 South Park Rd Louisville, Kentucky 40219
Email: Challengerlifts@soe.freshdesk.com Phone: 800-648-5438

IMPORTANT: **READ THIS MANUAL COMPLETELY BEFORE INSTALLING or OPERATING LIFT**

Rev. 2026/03/16

GENERAL SPECIFICATIONS – STANDARD AND QUICK CYCLE (CL12A-HT AND CL12A-HT-QC)

See Figure 1	CL12A-LC	CL12A (-6")	CL12A (MAX)	CL12A-1 (-6")	CL12A-1 (MAX)	CL12A-2 (-6")	CL12A-2 (MAX)
A Column Height	**143" [11'-11"]**	**158" [13'- 2"]**	**164" [13'-8"]**	**170" [14'-2"]**	**176" [14'- 8"]**	**182" [15'-2"]**	**188" [15'- 8"]**
Ceiling Height Required	**144" [12']**	**159"**	**165"**	**171"**	**177"**	**183"**	**189"**
B Floor to Overhead Switch	**136 ½"**	**152"**	**158"**	**164"**	**170"**	**176"**	**182"**
C Rise Height *(Screw Pads Highest Position)*	**74 ¾"**	**78 ¾"**					
Cylinder Stroke	**68"**	**72"**					
D Screw Pad Height	**5"** to **6 5/8"**						
Stack Adapter Height	**3"** & **6"**						
E Overall Width (3 OPTIONS AT INSTALL)	(-12") **142"**	(-6") **148"**		(MAX) **154"**			
F Inside of Columns	(-12") **114 ½"**	(-6") 120 ½"		(MAX) **126 ½"**			
G To Nearest Obstruction	(-12") **7'-0"**	(-6") **7'-3"**		(MAX) **7'-6"**			
Drive Thru Clearance	(-12") **103 ½"**	(-6") **109 ½"**		((MAX) **115 ½"**			
* Lifting Capacity* (Hydraulic Pressure at Cap.)	**12,000 lbs**. (**3000 lbs**. Per Arm) **(3200 psi)**						
** Rise Time (approx. Standard / QC)	**60 / 38 Sec**.	**63 / 40 Sec.**					
Motor	3HP, Single Phase, 60Hz, 208/230 **QC – 3 HP, Single Phase, 60 HZ, 208/230** Optional – 2HP, Three Phase, 50/60Hz, for 208 or 230 or 460						

* Lift capacity ratings are based on loads equally distributed on all four arms.
** Lifting and lowering speeds may vary depending on the weight of the vehicle.

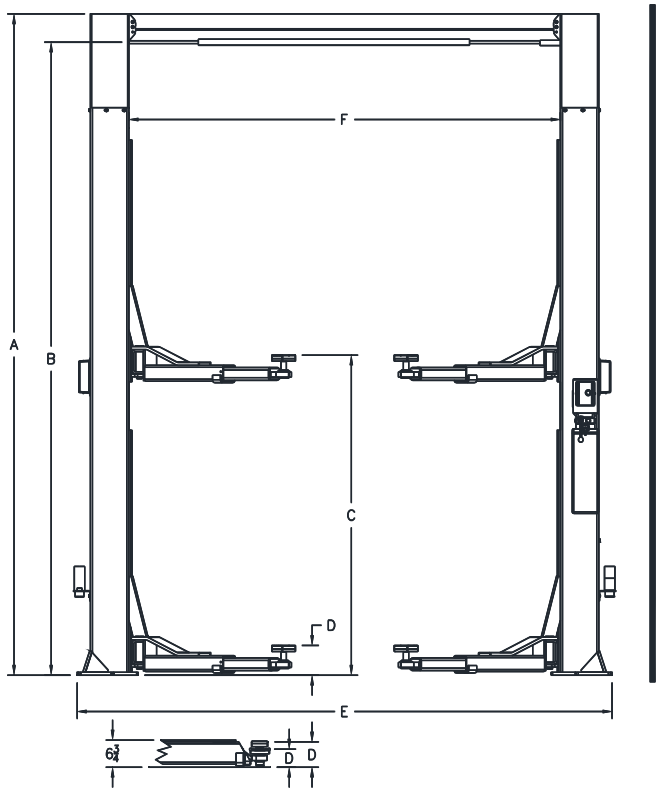

Fig. 1a - General Specifications

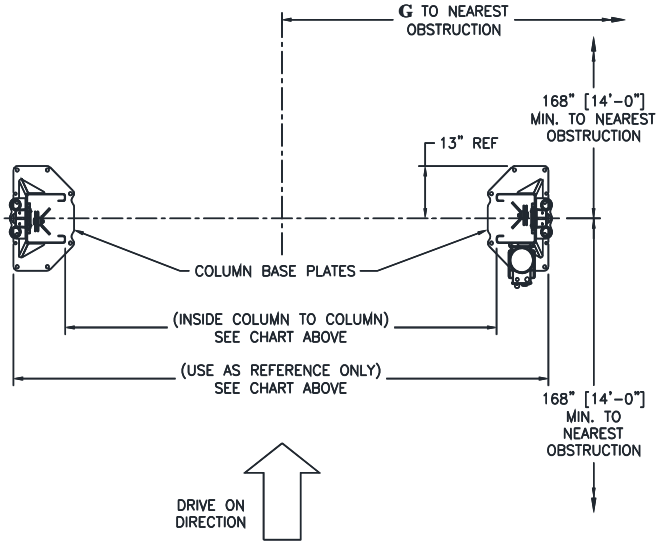

Fig. 1b - Service Bay Layout

Vertical Clearance

Check the height of the area where the lift is to be installed. Clearance should be calculated based on the full raised height of the lift.

WARNING **Failure by purchaser to provide adequate clearance could result in unsatisfactory lift performance, property damage, or personal injury.**

Flooring

Be certain you have the proper concrete floor to properly handle the loaded lift. Floor should be in generally good condition with no large cracks, spalling or deterioration.

Minimum requirements for concrete are 4 inches minimum depth, with steel reinforcement, 3500 psi, cured for 28 days per local commercial practice. Floor should be level within 3/8 inch over the installation area. No anchors should be installed within 8 inches of any crack, edge, or expansion joint. If these conditions cannot be met, a pad may be poured to accommodate the lift.

Check with local building inspectors and/or permits office for any special instructions or approvals required for your installation.

A qualified person should be consulted to address seismic loads and other local or state requirements.

WARNING **Failure by purchaser to provide the recommended mounting surface could result in unsatisfactory lift performance, property damage, or personal injury.**

Location

This lift has been evaluated for indoor use only with an operating ambient temp. range of 5 – 40°C (41–104°F)

Electrical Requirements

For lift installation and operation, it is necessary to have a dedicated circuit with circuit breaker or time delay fuse. Refer to wiring diagram for circuit sizing.

Safety Notices and Decals

For your safety, and the safety of others, read and understand all of the safety notices and decals included here.

READ ENTIRE MANUAL BEFORE ASSEMBLING, INSTALLING, OPERATING, OR SERVICING THIS EQUIPMENT.
PROPER MAINTENANCE AND INSPECTION IS NECESSARY FOR SAFE OPERATION.
DO NOT OPERATE A DAMAGED LIFT.

Safety decals similar to those shown here are found on a properly installed lift. Be sure that all safety decals have been correctly installed. Verify that all authorized operators know the location of these decals and fully understand their meaning. Replace worn, faded, or damaged decals promptly.

WARNING **Do not attempt to raise a vehicle on the lift until the lift has been correctly installed and adjusted as described in this manual.**

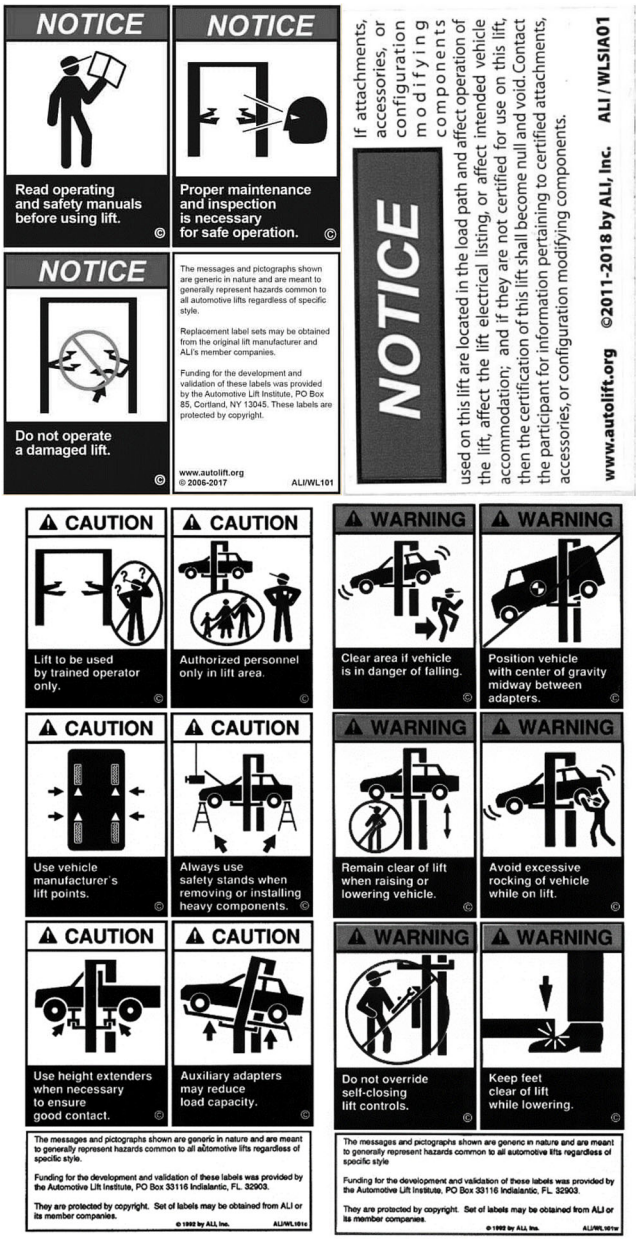

Receiving

The shipment should be thoroughly inspected as soon as it is received. The signed bill of lading is acknowledgement by the carrier of receipt in good condition of shipment covered by our invoice.

If any of the goods called for on this bill of lading are shorted or damaged, do not accept them until the carrier makes a notation on the freight bill of the shorted or damaged goods. Do this for your own protection.

NOTIFY ***Challenger Lifts*** AT ONCE if any hidden loss or damage is discovered after receipt.

IT IS DIFFICULT TO COLLECT FOR LOSS OR DAMAGE AFTER YOU HAVE GIVEN THE CARRIER A CLEAR RECEIPT.

File your claim with ***Challenger Lifts*** promptly. Support your claim with copies of the bill of lading, freight bill, and photographs, if available.

Component Packing List

PART #	QTY/ LIFT	DESCRIPTION
12809*-P	1	POWER COLUMN ASSEMBLY
12809*-I	1	IDLER COLUMN ASSEMBLY
CL12A-HW-A	1	HARDWARE BOX
12503-3S	1	3-STAGE ARM PACK
12820-143	2	COLUMN EXT. ASSY CL12A-LC
12820-164		COLUMN EXT. ASSY CL12A-0
12820-176		COLUMN EXT. ASSY CL12A-1
12820-188		COLUMN EXT. ASSY CL12A-2
12815	1	OVERHEAD BEAM
A2066	1	OVERHEAD SHUTOFF BAR ASSY
B2064-01	1	OVERHEAD LIMIT SWITCH
12803-*	1	SYNC. CABLE PACK
12804-*	1	LOCK RELEASE CABLE ASS'Y
B2206-6	2	ADAPTER EXTENSION (6")
B2206-3	4	ADAPTER EXTENSION (3")
B2209	2	ADAPTER RACK
AB-9858	1	STANDARD 1 PH POWER UNIT
AB-11530		QC 1 PH POWER UNIT
AD-9858-2		3 PH POWER UNIT
CL12A-LP-A	1	LITERATURE PACK

Edition of Standards Referenced

Where any ANSI standard or ALI materials are referenced within this manual, the most recent edition shall apply.

INSTALLATION

Safety Requirements for Installation and Service

Refer to ANSI/ALI ALIS (current edition)

IMPORTANT: Always wear safety glasses while installing lift.

Tools (minimum required)

a. Tape measure, 16ft
b. Chalk line
c. 4ft level
d. 10" adjustable wrench
e. Standard open-end wrenches 7/16", 1/2", (2) 9/16", (2) 11/16", 3/4"
f. 5/16" allen wrench
g. Needle nose pliers
h. Hammer drill with 3/4" dia. carbide tipped bits
i. 2 lb. hammer
j. Torque wrench: 150 ft.-lbs. min. w/ 1-1/8" socket
k. 12 ft. stepladder
l. Anti-Seize lubricant (for arm pins and foot pad screw threads and stop rings)

Layout

Note:

- **This lift can be installed at two different heights and three different widths. The Cable adjustment for the Height and Width variations will be accommodated by the Lower Sheave Bracket.**
- **The height and width must be established before beginning, as this will determine the lower sheave position.**

1) Once the general location of the lift has been determined, ensure that the proper conditions exist per **page 3**.
2) Determine which side of the bay the power unit will be located and identify the column assembly with the power unit bracket.
3) Lay out the service bay according to the architect's plans or owner's instructions ***(see* Fig 1b**–***Service Bay Layout***). **Failure to install in this orientation can result in personal and property damage.**

Lift Preparation

4) With column assemblies lying flat, remove cable and hose rolls from inside the column.
5) Manually push carriages up enough to unhook the cylinder hose from the base plate tabs. Proceed with pushing the cylinder and carriage up enough to access all five sheave locations on the sheave bracket, see **Fig 3**.

6) Determine the sheave location on the lower bracket based on the overall height and width of the lift at its chosen configuration. Use the General Specifications table from **page 2** and **Fig 2** below.

Note: The column has been assembled with the sheave in the highest position on the bracket for the lift installed at max height and max width.

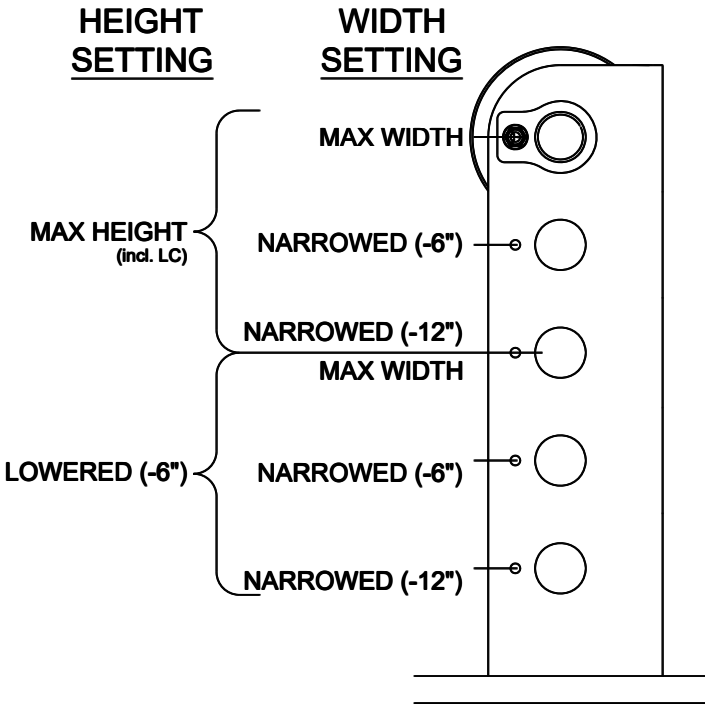

Fig. 2 –Sheave Position in Lower Bracket

7) The sheave must be removed and reassembled to route the synchronizer cable. Remove the bolt, sheave pin, bearing disc, sheave, and spacer bushing, **Fig. 3**.
8) Route a cable through a carriage and out the bottom. Route, it back up and into the inside hole at the top of the carriage, see **Fig 3**. **Ensure cables do not twist or wrap around hoses during routing**.
9) Install a nut and jam nut at the cable end, **Fig 3**.
10) Reinstall the sheave. Place the bearing disc inside the bracket centered over the bracket hole based on the chosen install height. Install the cable on the sheave and slide into place. Stack the spacer bushing onto the sheave assembly. Still holding the sheave assembly, slide the pin into place and secure it with the bolt, see **Fig 3**.
11) Pull tension on the free end of the cable and ensure proper routing. While pulling tension on the cable, slide the cylinder and carriage down until the carriage is 8” from the baseplate. Slide the hydraulic cylinder down and route the hydraulic hose around the hose guide tabs to prevent rotation of the cylinder, **Fig 4**. While pulling tension on the cable to avoid kinking, slide the carriage and cylinder down to base of lift.

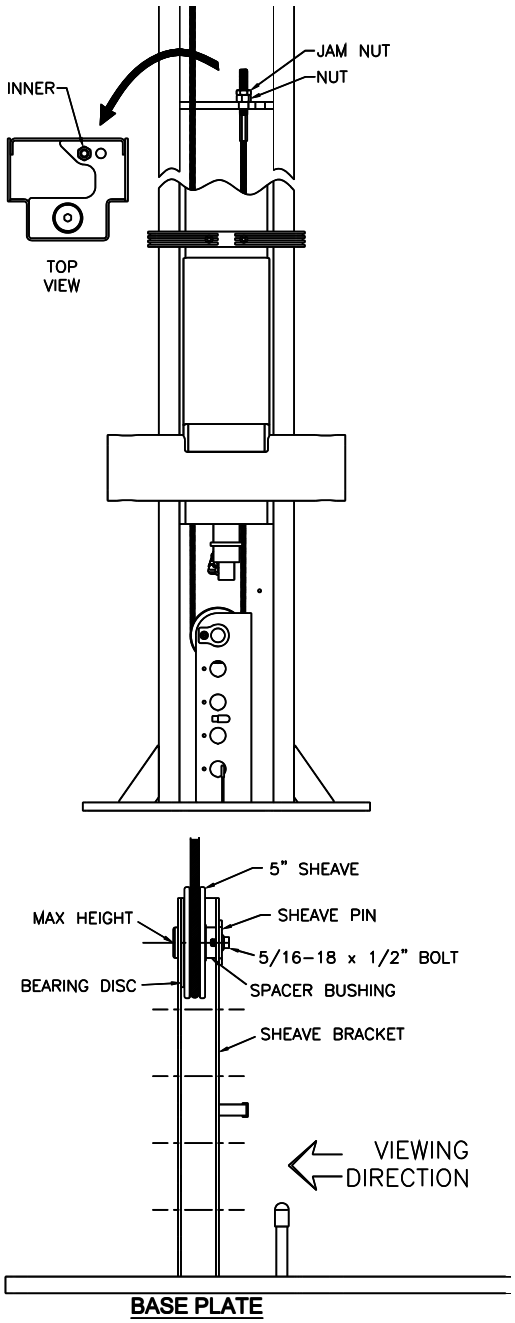

Fig. 3 – Cable Routing

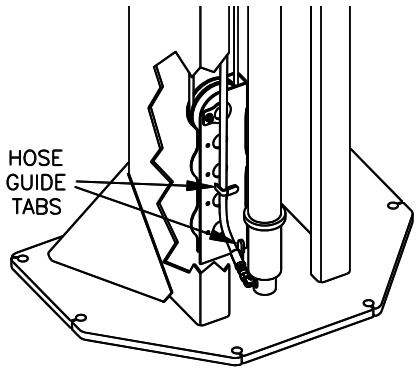

Fig. 4 - Hose Connection

12) Assemble column extension to column by lining up the correct set of holes and using the 3/8”-16 x 3/4" lg. hex flange head bolts, **Fig. 5.**

Note: the column extensions are adjustable by 6” except for the CL12A-LC.

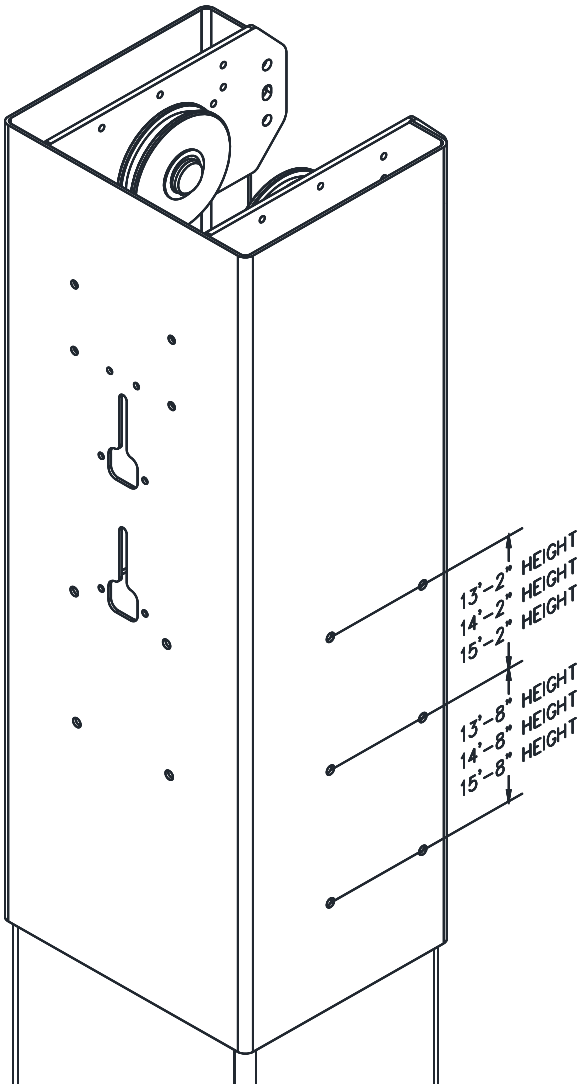

Fig. 5 – Column Extension Assembly

13) Repeat the cable routing / lower sheave install and the column extension install for the other column.

14) Erect and align both column assemblies.

Lock Pawl

15) Install the lock components on the Power & Idler columns as shown in **Fig. 6a & 6b**. The D-Rings used to connect both ends of the Long 3/8 OD Spring act as chain links. Feed one end of the D-Ring through both items and squeeze the link closed with pliers until ends overlap as shown.

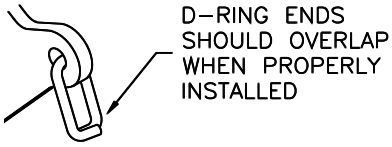

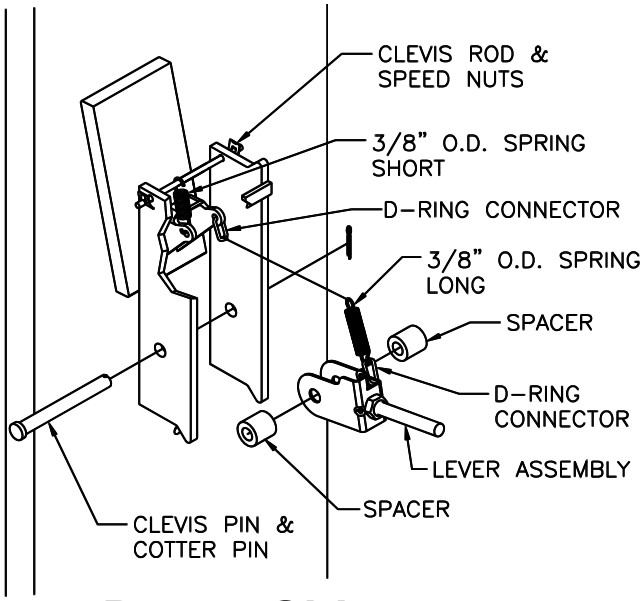

Power Side

Fig. 6a – Power Locking Pawl Assembly

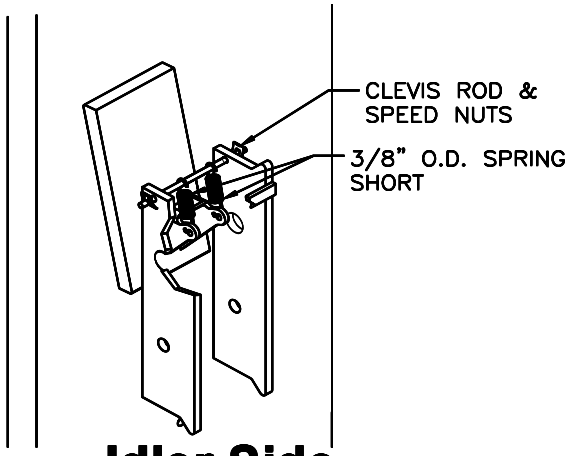

Idler Side

Fig. 6b – Idler Locking Pawl Assembly

Anchoring

- The anchor bolts must be installed at least 8” from any crack, edge, or expansion joint. Recheck the area around both base plates.
- Use a concrete hammer drill with a 3/4-inch carbide bit. Tip diameter should conform to ANSI Standard B212.15 (.775 to .787). Do not use excessively worn bits or bits, which have been incorrectly sharpened. A core bit may be necessary if an obstruction is encountered. **Never substitute with shorter anchor.**

16) Recheck “Inside of Columns” dimension (**Fig. 1**).
17) Using the base plate as a template, drill one anchor hole. Drill through the floor if possible or to a depth of 5 inches minimum.
18) Clean the hole inside and out.
19) Assemble a washer and nut to the anchor with nut just below impact section of bolt. Drive the anchor into the hole until the nut is 3/4” above the baseplate (leaving room for shims).

Complete steps 17 thru 19 for the six (6) exposed anchors (one at a time) around each column.

20) Raise both carriages (275 lbs. ea.) high enough to drill the two inner anchor holes on each column. Measure both carriage heights to ensure they are in the same lock position.
21) **IMPORTANT**: Ensure that the lock pawl is engaged by attempting to manually disengage it. When properly engaged, the weight of the carriage will prevent it from moving.
22) Repeat steps 17 thru 19 for the two (2) anchors under each carriage.
23) Shim both columns to plumb using the shims provided as shown in **Fig. 7**. DO NOT shim more than 1/2" at any given point. Use a level no less than 24” in length to plumb columns.
24) Drive all the anchors until nut and washer contact baseplate.

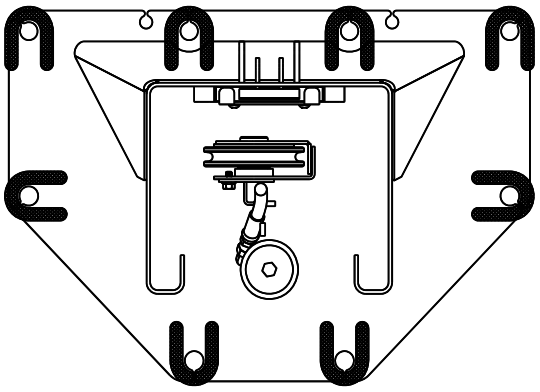

Fig. 7 – Column Shimming

25) Tighten Power Column anchors and recheck column for plumb. Re-shim if necessary. Torque to 150-foot pounds to set anchors.
26) Loosen Idler Column anchors 1/8” and proceed with the Overhead Beam installation.

Overhead

27) Before raising overhead into position install 4 (2 per column) hex flange bolts and nuts in bottom hole of column extension ***(see Fig. 8 Installation Aid)*** for temporary support of overhead. Lift overhead assembly up into position and install with 8 each (4 per column) 3/8”-16 x 3/4” lg. hex flange bolts and hex flange nuts per side as shown in **Fig. 8**. For the max width position, the outer overhead holes will be used. For the (-6”) width, use one set of outer overhead holes and one set of inner overhead holes. For the (-12”) width, use the inner sets of overhead holes.

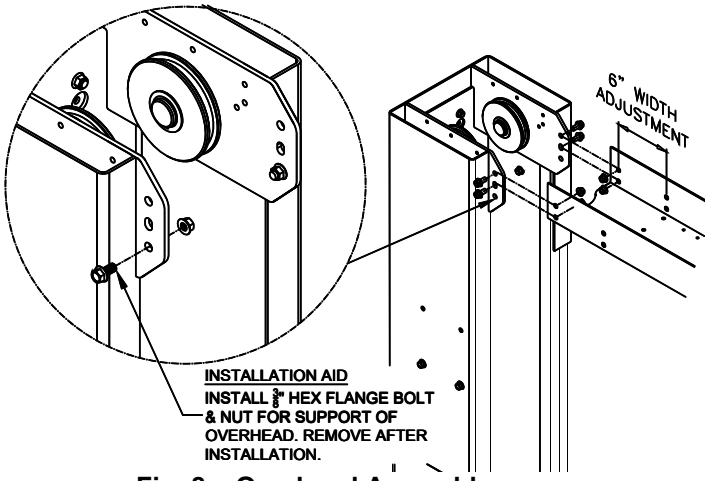

Fig. 8 – Overhead Assembly

28) Check idler column shimming. Use additional shims (***see Fig. 7***) to remove any gaps that may have been created while installing overhead beam. Tighten anchor bolts and re-check column for plumb. Torque to 150 foot-pounds.

29) Attach the Overhead Limit Switch to the rear set of holes on the Power Side of the Overhead Beam using the hardware already attached to the switch bracket, **Fig. 9.**

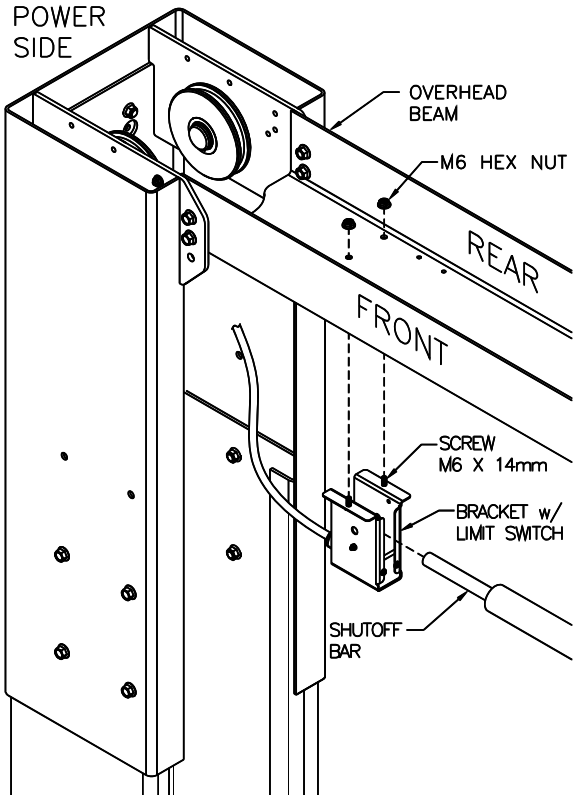

Fig. 9 – Overhead Limit Switch Power Side

30. Repeat for Idler Side – Attach the Idler Bracket to the rear set of holes on the Idler Side of the Overhead Beam using the hardware already attached to the bracket, **Fig. 10. Note the orientation of the Idler Bracket. The narrow slot needs to be facing towards the Power Column.**

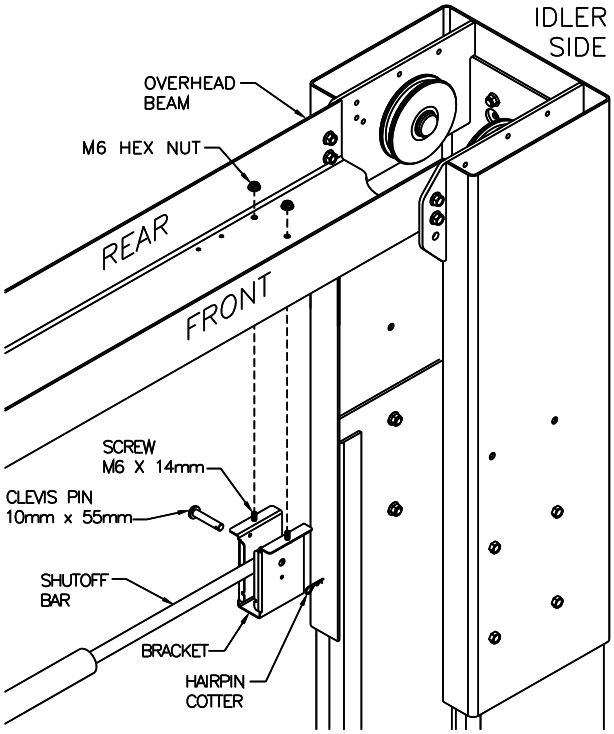

Fig. 10 – Overhead Bracket Idler Side

30) Carefully insert the Shutoff Bar into the Power Side Switch Bracket over the limit switch and pin the Shutoff Bar to the Idler Side Bracket with the 10mm dia. x 55mm Lg. clevis pin & hairpin cotter.

Synchronizer Cables

31) Route the free end of a cable coming out the top of the carriage up and over the upper sheaves and back down the opposite side. Install a 3/8x3 cable trapping bolt with a nut on each side of the overhead support plate at each sheave, **Fig. 11**. Do this for both cables.

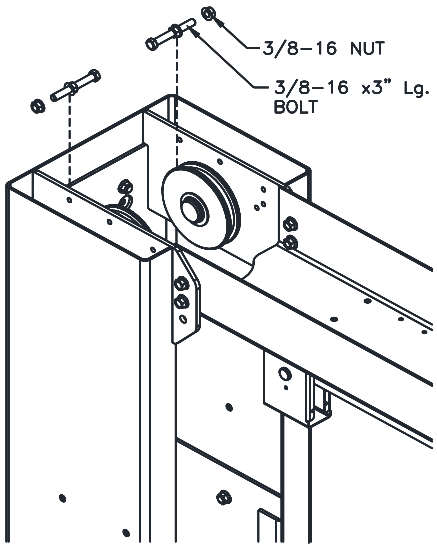

Fig. 11 – Column Ext. Cable Trapping

32) Mount synchronizer cables to carriages as shown in **Fig. 12**.

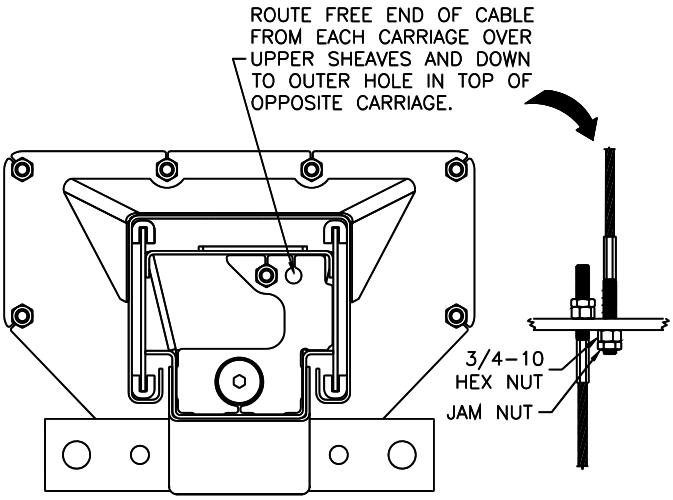

Fig. 12 – Cable Attachment at the Carriage

Hydraulics

IMPORTANT: To ensure proper hose fitting seal without damage to the fitting follow this procedure for each hose connection: Screw flared fitting on finger tight. Rotate flared fitting 1 1/2 hex flats (90 deg.). Back the flared fitting off one full turn. Again, tighten flared fitting finger tight, then rotate flared fitting 1 1/2 hex flats (90 deg.).

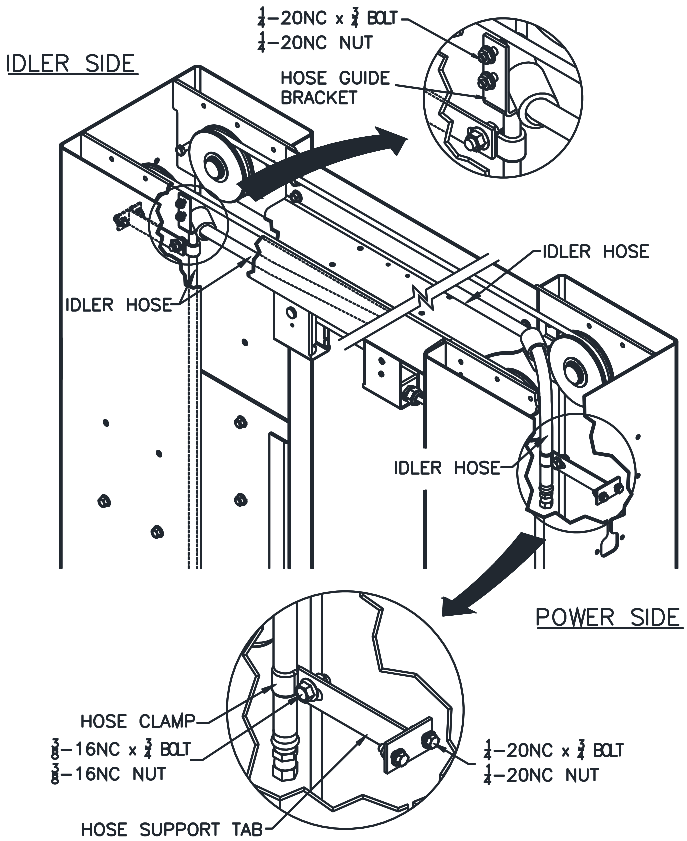

Fig. 13 – Idler Hose Routing & Hose Brackets

33) Install the Hose Guide Brackets and Hose Support Tabs to both the Idler & Power Columns using 1/4" -20NC x 3/4" lg. hex flange bolt and nut, see **Fig 13**.

34) Uncoil Idler side hose and Overhead hose and attach them together. Route the loose end up the Idler Side column extension and attach to the Hose Support Tab with a "P" Clamp, **Fig. 13**. (Each hose clamp requires one 3/8"-16NC x 3/4" lg. hex flange bolt and one hex flange nut.) Remove slack and tighten the clamp.

35) Route hose across overhead through both Hose Guide Brackets, **Fig.13**, and down through the Power Side column extension. Do not attach clamps to the Overhead Hose at this time.

36) Uncoil Power Column hose and loosely attach it to the hydraulic tee fitting (*in hardware box*). **Note: CL12A-1 & CL12A-2 will require two extension hoses (supplied) to be attached to the tee fitting to extend the power column hose and to the power unit to extend the power unit hose.**

37) Bring the Power Unit Hose and Power Side Hose up the column to the lowest available hole of the column extension. Insert steel tubing end of the Power Unit Hose into the extension (outside in) and loosely connect to the tee. Leave the assembly hanging.

38) Install a steel line clamp and hose clamp on the outside of the power column extension to secure the power unit hose, as shown in **Fig 14**. (Use 1/4" -20NC x 3/4" lg. hex flange bolt, Spacer, and hex flange nut for steel line clamp. The Spacer goes between the Power Side Column Extension and Line Clamp.) **Note: The steel line inside the column should be horizontal.**

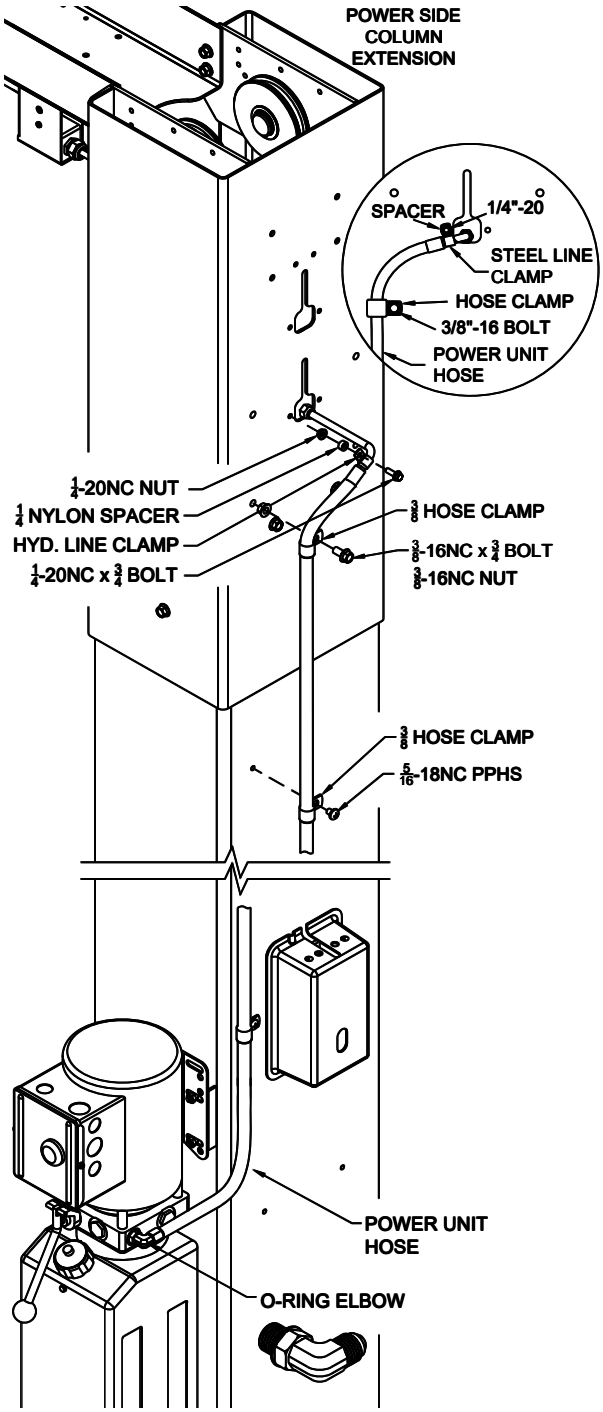

Fig. 14 - Power Unit Hose Clamps

39) If installing a CL12A-LC, CL12A-0 or CL12A-1, use the Routing Diagram C in **Fig 15**. If installing a CL12A-2 use the table in Fig 14 to determine the proper routing diagram A, B, OR C.

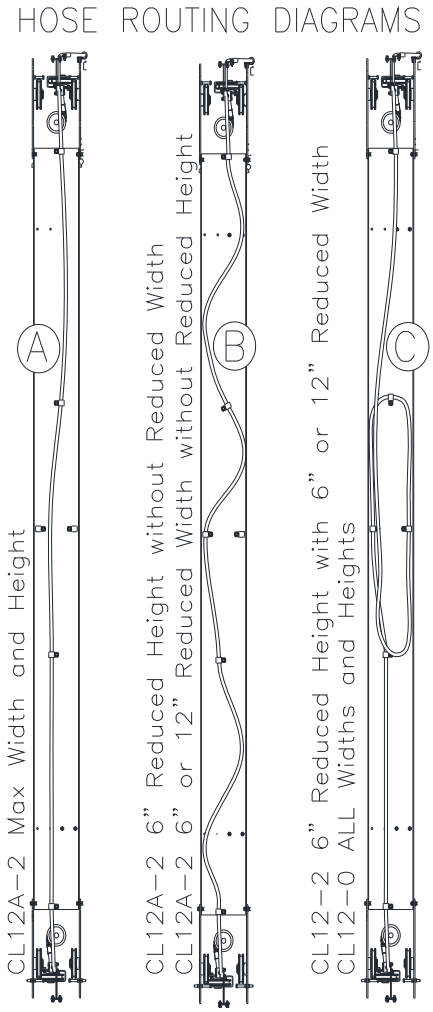

HOSE ROUTING TABLE

CL12A-2 HEIGHT	CL12A-2 WIDTH: STD	−6"	−12"
MAX	A	B	B
−6"	B	C	C

Fig. 15 – Overhead Hose Routing Diagram

40) Route the overhead hose based on the lifts height and width. To make a loop, twist the hose. Loosely connect the overhead hose to the other end of the tee.

41) Tighten the three hose fitting connections at the Tee taking care not to twist or change the lay of any hose. Install and tighten the "P" clamp on the power side to hold up the connection to the tee, see **Fig 16**.

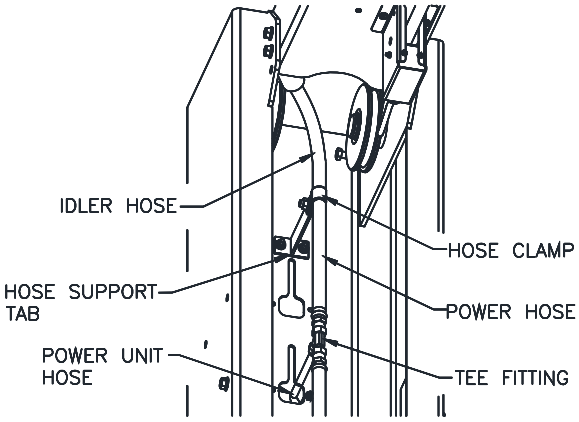

Fig. 16 – Power Side Hose Routing

42) Install the rest of the overhead hose clamps as shown in **Fig 15** depending on the lift configuration.

43) Each column hose should connect to its cylinder with a 90-degree elbow rotated up from horizontal and be routed thru the Hose Guide Tabs as shown in **Fig. 17.**

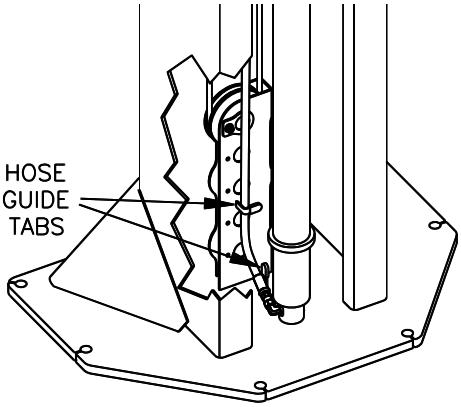

Fig. 17 - Hose Connection

44) Slightly loosen the 90 Degree Fitting jam nut at the bottom of the Power Side Cylinder. Rotate fitting to remove the slack from the power side hose and tighten jam nut. **Note: This is not necessary for the Idler side.**

45) Mount Power Unit to power unit bracket on the column as shown in **Fig. 14**. The mounting hardware, (4) 5/16" -18 hex nuts, are pre-installed on power unit mounting bracket.

46) Install 9/16"-18 O-ring elbow (*in hardware box*) into power unit and attach free end of power unit hose to elbow, **Fig.14.**

47) Attach the power unit hose to the column and column extension using the hose clamps, **Fig.14.**

48) **Be Certain All Fittings and Connections are Tight. It is the installers responsibility to ensure system is leak-free.** Fill the Power Unit with three gallons of clean 10wt anti-foam anti-rust hydraulic oil or Dexron III ATF. **Do Not Use Oils With Detergents.**

Lock Release

49) Pick one end of the Lock Release Cable Assembly and attach its Threaded Adjustment Sleeve to the Upper Mounting Tab on the power side lock. Insert the adjustment sleeve into the mounting tab notch and position the adjustment sleeve nuts so the bottom of the sleeve sticks out approx. 3/8" from bottom hex jam nut, **Fig. 18a.**

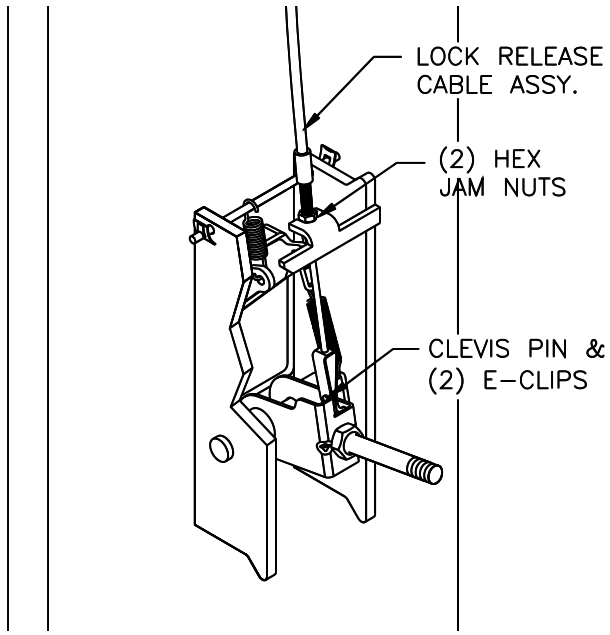

Fig. 18a-Lock Release – Power Side

50) Connect clevis end of the cable assembly to the center tab of the lever assembly using a clevis pin and (2) E-clips, **Fig. 18a.**

51) Route other end of lock release cable up thru power side column extension, over and thru idler side column extension, and down to mounting location on idler column.

52) Attach the Lower Mounting Tab to the idler column using the 5/16-18 x 3/8 long Phillips pan head screw. Rotate slightly to be in-line with connection to lock pawl as shown in **Fig. 18b**.

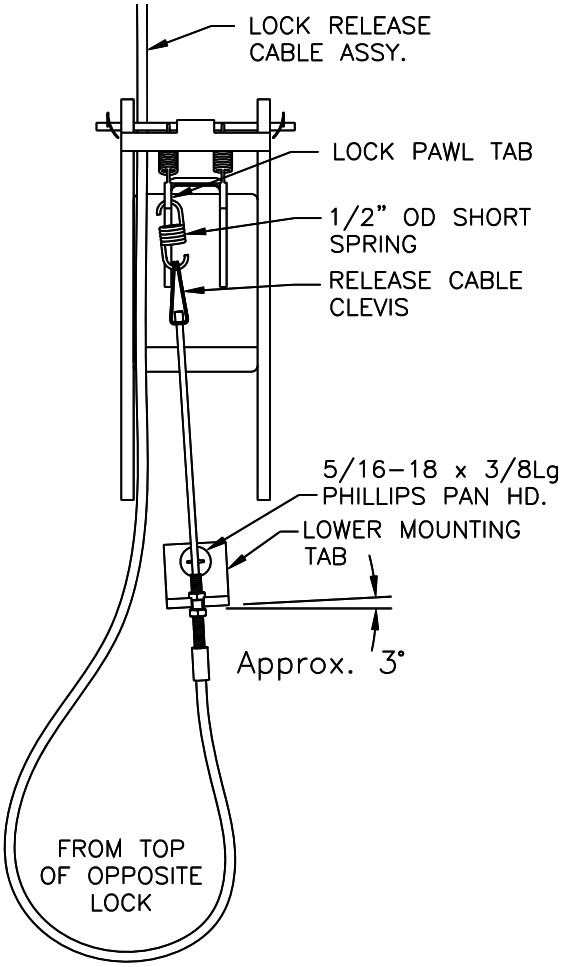

Fig. 18b-Lock Release – Idler Side

53) Hook the 1/2" O.D. (short) spring to the left side of the Lock Pawl Tab, collapse the clevis at the end of the lock release cable, and hook the clevis to the bottom of the 1/2" O.D. spring, **Fig. 18b**.

54) Mount lock release cable threaded adjustment sleeve to lower mounting tab using jam nuts.

55) Use wire ties provided to secure lock cable to the hydraulic hose.

Arm Installation

56) Extend the foot pad to both extents and apply "anti-seize" to the retaining ring.

57) Arm restraint assemblies should be installed on carriage as shown in **Fig. 19**.

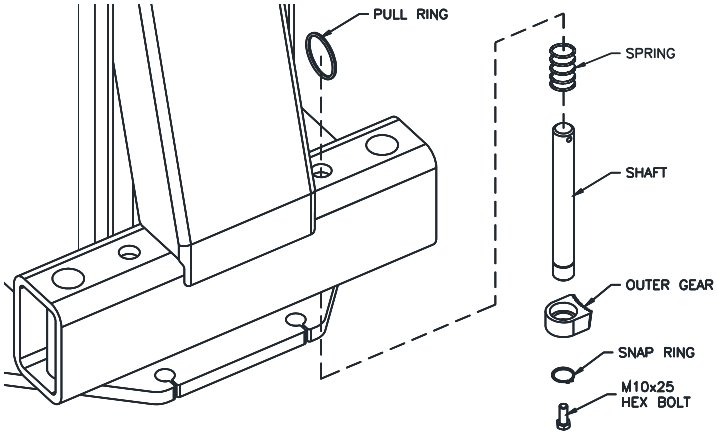

Fig. 19-Arm Restraint

58) Install inner arm gear to bottom of arm using (2) M10 x 25 Hex bolts as shown in **Fig. 20**. Do not tighten bolts at this time.

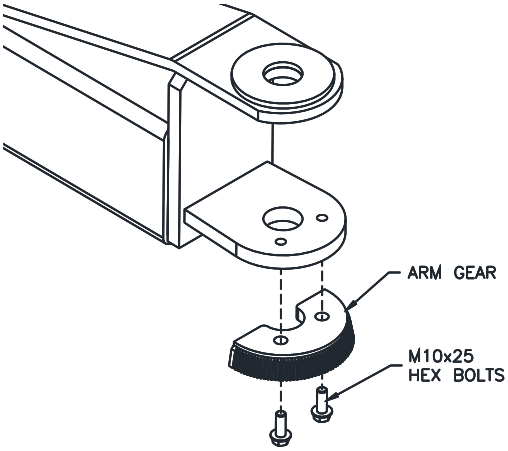

Fig. 20-Inner Arm Gear

59) Lubricate the arm pin or carriage arm pin hole with "anti-seize" and install the arms.

60) Adjust placement of inner arm gear until gears fully engage with one another throughout the rotation of the arm and tighten bolts.

61) Adjust the hex head bolt in the bottom of the arm restraint shaft so the arm is allowed to rotate freely when lift is completely lowered, **Fig. 21**.

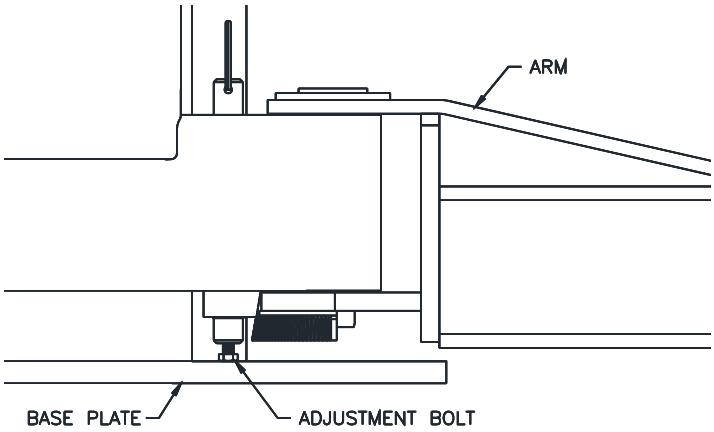

Fig. 21-Bolt Adjustment

Adapter Rack Installation

62) Locate the two pre-drilled holes on the back of each column 19" up from the top of the base plate and tap 5/16-18. Center the adapter rack and attach with 5/16-18NC Phillips Pan Head Screws supplied, **Fig. 22**.

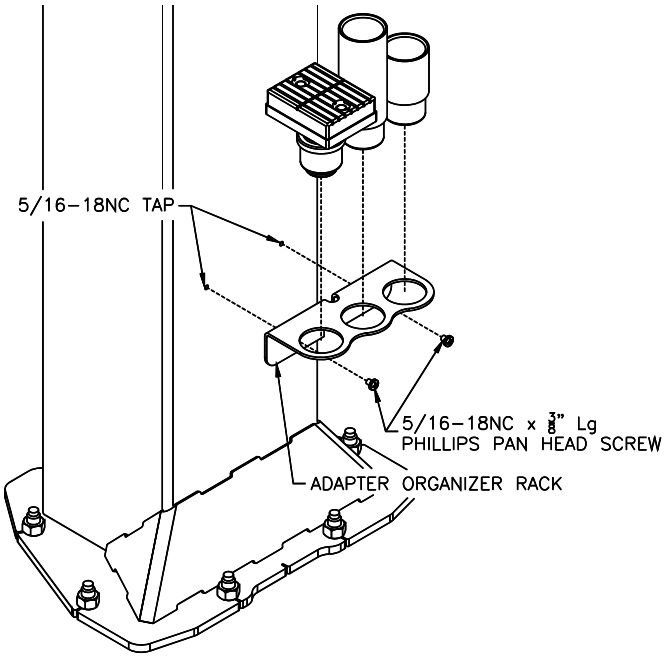

Fig 22-Adapter Rack Installation

Safety Decal Placement

63) Clean surface of the rear column above the power unit and install Safety Decals, **Page 3** and **Fig. 23**.

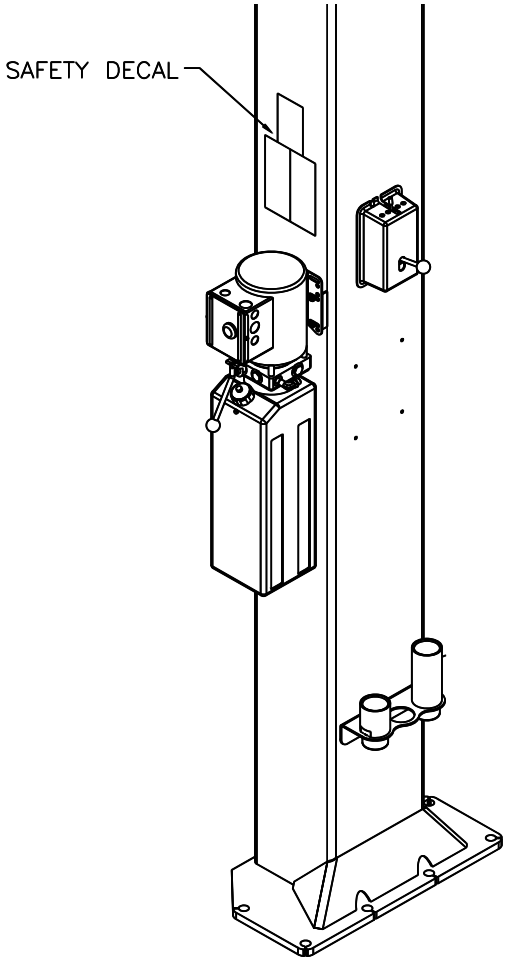

Fig. 23-Safety Decal Placement

Electrical

See Figure 25 for the following steps.

64) Wire-tie Limit Switch cord to power unit hose.

65) Connect the Overhead Limit Switch Cord to Power Unit, **Fig. 25**.

66) Connect Power Unit to suitable electrical source as shown in **Fig. 25**.

IMPORTANT: After wiring has been completed, test operation of Power Unit & Overhead Limit switch. While raising lift, operate Overhead Shutoff Bar. Power Unit Motor should stop when Shutoff Bar is raised.

Final Adjustments

Hydraulics

67) Lower the lift to the floor and raise the lift approximately one foot.
68) Start with Idler side first. Slowly and carefully loosen the bleed plug on top of the cylinder just enough to allow the entrapped air to escape. Repeat for power side.
69) Raise lift 6 inches. Repeat step 68 until no air comes out of cylinder.
70) Pressure test hydraulic system. Energize power unit, raise lift to full rise and continue to run motor for additional 10 seconds. (NOTE: pressure relief will make a high pitch squeal sound for these 10 seconds.) Check hydraulic system for leaks.
71) Energize power unit again for 10 seconds. With a clean rag, wipe down both cylinder rods. (The cylinders are shipped with a small amount of clear anti-corosive lubricant that will be forced out through the wiper when the lift reaches full rise.) **If lubricant is not wiped clean from the cylinder rod, the cylinder will apear to be leaking**.

Synchronizing Cables

72) Raise lift and ensure carriages lower into same lock position.
73) Adjust synchronizing cables so the tension is equal in both cables and carriages are firmly sitting on locks.
74) Cycle lift to ensure that latches operate simultaneously. Adjust if necessary.

Lock Release

75) Lower lift to the floor and snap plastic cover over Power Column lock assembly.
76) Pull and release Power Column lock release handle while watching Idler Column lock. Adjust lower threaded sleeve cable adjuster jam nuts on Idler Column until Idler Column lock disengages and engages fully. When properly adjusted, the idler column lock should just come to rest against the back of the column when engaged and fully out against the tab when disengaged. Tighten Idler Column lower tab jam nuts.

IMPORTANT: If idler side lock pawl does not fully disengage, damage may result to idler side carriage and or cable synchronizing system.

77) Tighten threaded sleeve cable adjuster jam nuts and install lock release knob.
78) Tighten and trim wire ties.
79) Snap plastic cover over Idler lock assembly (align release cable with notches in cover).

Arm Pin Keeper Install

80) Install the arm pin into the arm assembly and carriage.
81) Raise lift high enough to gain access underneath the carriage. **Make Sure Lift Is In Locks Before Proceeding.**
82) Slide the provided washer onto pin up against the inner bevel gear.
83) Install the provided retaining ring onto the pin with tool, **Fig 24**.

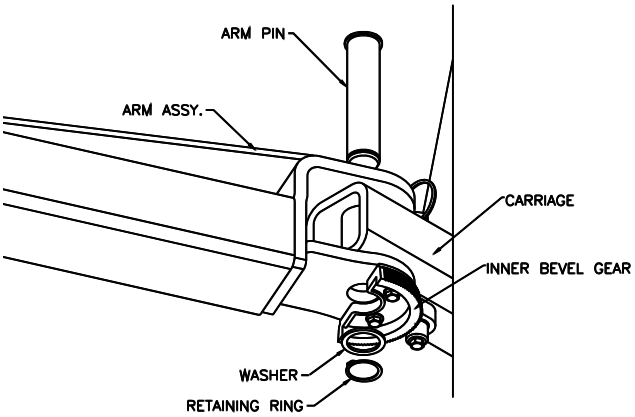

Fig 24 –Arm Pin Keeper Install

Final Checkout Procedure

84) Demonstrate the operation of the lift to the owner/operator/employer using a typical vehicle and review correct and safe lifting procedures using the **Lifting It Right** booklet as a guide.
85) Return all provided literature (including this manual) to the literature pack envelope and deliver the envelope to the owner/operator/employer.
86) Complete the online warranty registration (refer to the included warranty statement).

Wiring Diagram

* EACH LIFT SHOULD HAVE A DEDICATED CIRCUIT WITH A DOUBLE POLE (THREE POLE FOR 3 PHASE) BREAKER OR TIME DELAY FUSE SIZED ACCORDING TO THE FOLLOWING CHART.
* WIRING MUST COMPLY WITH ALL LOCAL ELECTRICAL CODES.
* ELECTRICAL CODE REQUIRES A SERVICE DISCONNECT FOR THIS DEVICE. WE SUGGEST THIS SERVICE DISCONNECT BE LOCATED NEAR THE POINT OF OPERATION.

STANDARD

	2Hp
1ø 208–240V	20amp

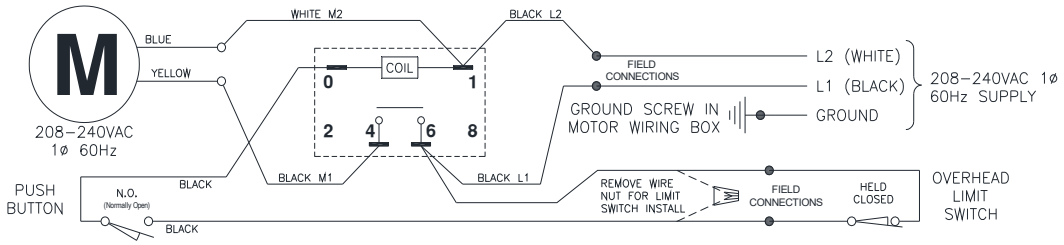

QUICK CYCLE

	3Hp
1ø 208–240V	30amp

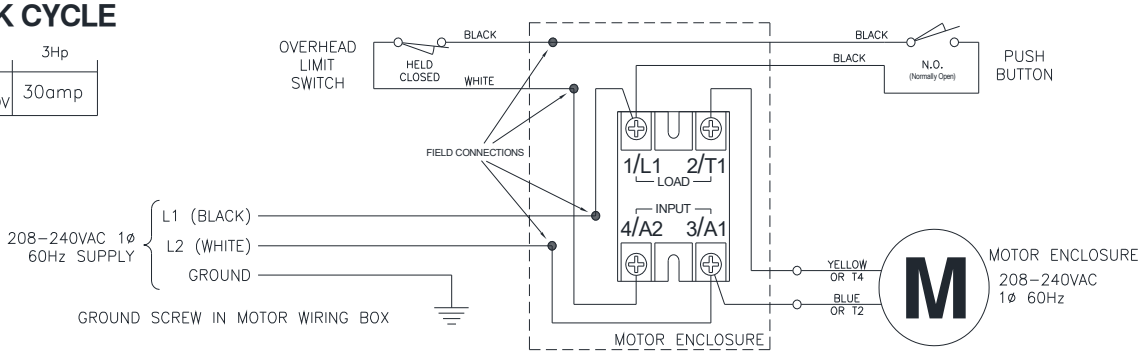

THREE PHASE

	3Hp
3ø 208V	15amp
3ø 230V	15amp
3ø 460V	10amp

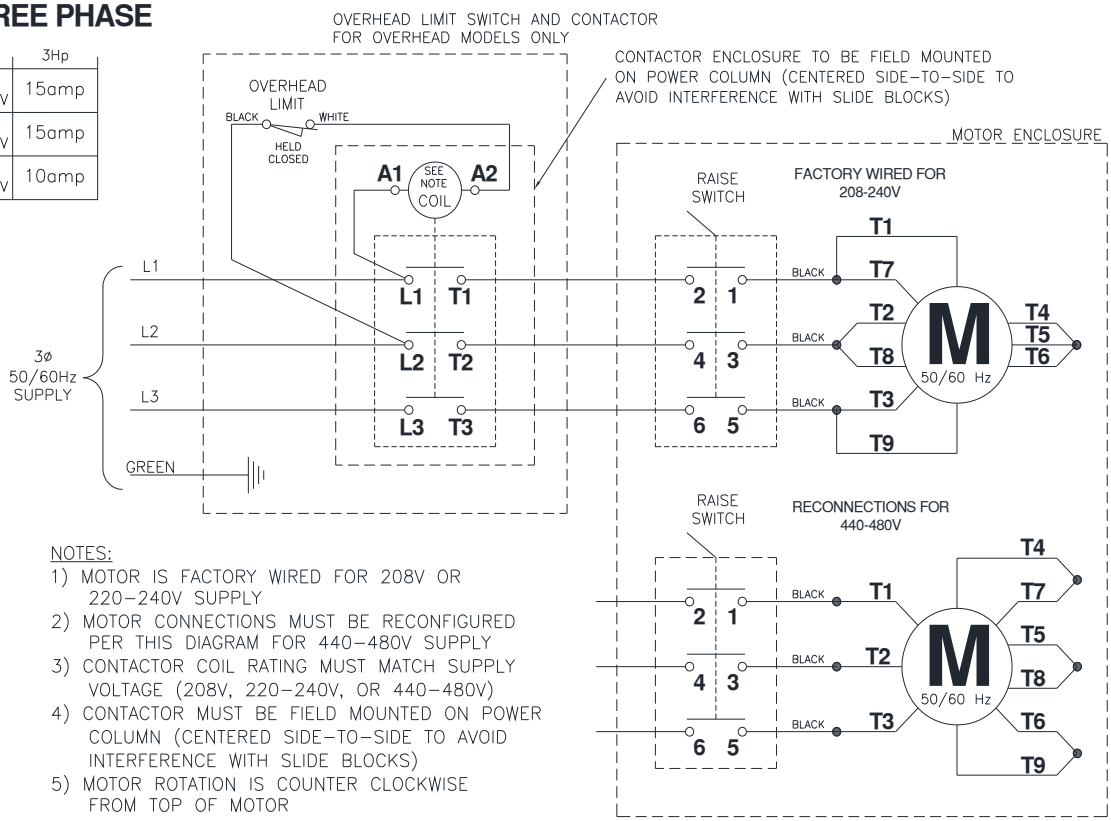

NOTES:
1) MOTOR IS FACTORY WIRED FOR 208V OR 220–240V SUPPLY
2) MOTOR CONNECTIONS MUST BE RECONFIGURED PER THIS DIAGRAM FOR 440–480V SUPPLY
3) CONTACTOR COIL RATING MUST MATCH SUPPLY VOLTAGE (208V, 220–240V, OR 440–480V)
4) CONTACTOR MUST BE FIELD MOUNTED ON POWER COLUMN (CENTERED SIDE–TO–SIDE TO AVOID INTERFERENCE WITH SLIDE BLOCKS)
5) MOTOR ROTATION IS COUNTER CLOCKWISE FROM TOP OF MOTOR

Fig. 23 – Electrical Wiring Diagram

OPERATION PROCEDURE

SAFETY NOTICES AND DECALS

This product is furnished with graphic safety warning labels, which are reproduced on page 3 of these instructions. Do not remove or deface these warning labels or allow them to be removed or defaced. For your safety, and the safety of others, read and understand all of the safety notices and decals included.

OWNER/EMPLOYER RESPONSIBILITIES

This lift has been designed and constructed according to ANSI/ALI ALCTV standard. The standard applies to lift manufactures, as well as to owners and employers. The owner/employer's responsibilities as prescribed by ANSI/ALI ALOIM, are summarized below. For exact wording refer to the actual standard provided with this manual in the literature pack.

The Owner/Employer shall ensure that lift operators are qualified and that they are trained in the safe use and operation of the lift using the manufacturer's operating instructions; ALI/SM, *ALI Lifting it Right safety manual*; ALI/ST, *ALI Safety Tips card*; ANSI/ALI ALOIM, *American National Standard for Automotive Lifts-Safety Requirements for Operation, Inspection and Maintenance;* ALI/WL Series, *ALI Uniform Warning Label Decals/Placards*; and in case of frame engaging lifts, ALI/LP-GUIDE, *Vehicle Lifting Points/Quick Reference Guide for Frame Engaging Lifts.*

The Owner/Employer shall establish procedures to periodically inspect the lift in accordance with the lift manufacturer's instructions or ANSI/ALI ALOIM, *American National Standard for Automotive Lifts-Safety Requirements for Operation, Inspection and Maintenance*; and the employer shall ensure that the lift inspectors are qualified and that they are adequately trained in the inspection of the lift.

The Owner/Employer shall establish procedures to periodically maintain the lift in accordance with the lift manufacturer's instructions or ANSI/ALI ALOIM, *American National Standard for Automotive Lifts-Safety Requirements for Operation, Inspection and Maintenance*; and the employer shall ensure that the lift maintenance personnel are qualified and that they are adequately trained in the maintenance of the lift.

The Owner/Employer shall maintain the periodic inspection and maintenance records recommended by the manufacturer or ANSI/ALI ALOIM, *American National Standard for Automotive Lifts-Safety Requirements for Operation, Inspection and Maintenance*.

The Owner/Employer shall display the lift manufacturer's operating instructions; ALI/SM, *ALI Lifting it Right safety manual*; ALI/ST *ALI Safety Tips card*; ANSI/ALI ALOIM, *American National Standard for Automotive Lifts-Safety Requirements for Operation, Inspection and Maintenance*; and in the case of frame engaging lift, ALI/LP-GUIDE, *Vehicle Lifting Points/Quick Reference Guide for Frame Engaging Lifts*; in a conspicuous location in the lift area convenient to the operator.

IMPORTANT SAFETY INSTRUCTIONS

When using your garage equipment, basic safety precautions should always be followed, including the following:

1. Read all instructions.
2. Care must be taken as burns can occur from touching hot parts.
3. To reduce the risk of fire, do not operate equipment in the vicinity of open containers of flammable liquids (gasoline).
4. Keep hair, loose clothing, fingers, and all parts of body away from moving parts.
5. Use only as described in this manual. Use only manufacturer's recommended attachments.
6. ALWAYS WEAR SAFETY GLASSES. Everyday eyeglasses only have impact resistant lenses, they are not safety glasses.

SAVE THESE INSTRUCTIONS

Lifting a Vehicle

1) Ensure that the lifting arms are parked, out to full drive thru position.
2) Center the vehicle between the columns in the service bay and position the vehicle's center of gravity midpoint between the columns. NOTE: the center of gravity is based on the weight distribution and is not the same as the center point of the vehicle.

Do not exceed 3000 pounds per arm.

Do not attempt to lift the vehicle with only two arms, as this will void the warranty

Ensure that the highest point on the vehicle will contact the Overhead Limit Switch Bar.

Do not place the vehicle in the service bay backwards.

Refer to the vehicle manufacturers service manual, technical bulletins, "Vehicle Lifting Points Guide" (ALI/LP-Guide) or other publications to locate the recommended lifting points.

3) Position the arms and adapters so all four pads contact the vehicle simultaneously.

The vehicle should remain level during lifting.

4) Press the raise button until all four wheels are off the ground. Test the stability of the vehicle by attempting to rock the vehicle. Check adapters for secure contact with vehicle lift points. If the vehicle seems unstable, lower the lift and readjust the arms. If the vehicle is stable, raise the vehicle to a height a few inches above the desired working height.
5) Lower the vehicle until the locks on both columns engage. The vehicle should remain level when both locks are engaged. If one side engages and the other continues to descend, stop lowering the vehicle, raise it several inches, and try again to engage both locks.

Always lower lift into locks before entering the area beneath the vehicle.
Always use safety stands when removing or installing heavy components.

Lowering A Vehicle

1) Ensure that the area under the vehicle is clear of personnel and tools.
2) Press the Raise Button until both latches are free.
3) Disengage the locks by pulling down on the lock release lever.
4) Lower the vehicle by depressing the lowering valve handle.
5) Continue to lower the vehicle until the carriages stop against the base plate. Retract the extension arms, and park them.

Loss of power

If for any reason the lift will not raise off of the locks or the locks will not retract, consult factory authorized personnel.

DO NOT OVERRIDE ANY SAFETY FEATURE IN AN ATTEMPT TO LOWER THE LIFT.

Maintenance

To avoid personal injury, permit only qualified personnel to perform maintenance on this equipment. Maintenance personnel should follow lockout/tagout instructions per ANSI Z244.1.
The following maintenance points are suggested as the basis of a routine maintenance program. The actual maintenance program should be tailored to the installation and include a record of each planned maintenance activity and repair maintenance activity performed. Refer to the maintenance section of the ANSI/ALI ALOIM booklet (blue book) provided with the lift.

- If lift stops short of full rise or chatters, check fluid level and bleed both cylinders per Installation Instructions.
- Replace all Safety, Warning or Caution Labels if missing or damaged (***See Installation instructions page 3***.)

Daily

- Keep lift components clean.
- Check for loose or broken parts.
- Check hydraulic system for fluid leaks.
- Check adapters for damage or excessive wear. Replace as required with genuine Challenger Lifts parts.
- Check the lock release activation. When properly adjusted, both locks should be in a vertical position when lock release lever is pulled and should return to an engagement position when the lever is released.

Weekly

- Check synchronizer cables and sheaves for wear. Replace as required with genuine Challenger Lifts parts.
- Check synchronizer cable tension per Installation Instructions. Adjust if necessary.

Monthly

- Torque concrete anchor bolts to 80 ft-lbs.
- Visually inspect concrete floor for cracks and/or sprawls within 12" of base plate
- Check overhead shutoff switch. While raising lift, operate overhead shutoff bar. Power Unit motor should stop when bar is raised.
- Lubricate carriage slide tracks with heavy viscous grease. (Grease all (4) corners of both columns.)

If any problems are encountered, contact your local service representative.

PARTS BREAKDOWN

Fig A. Column Extension & Overhead

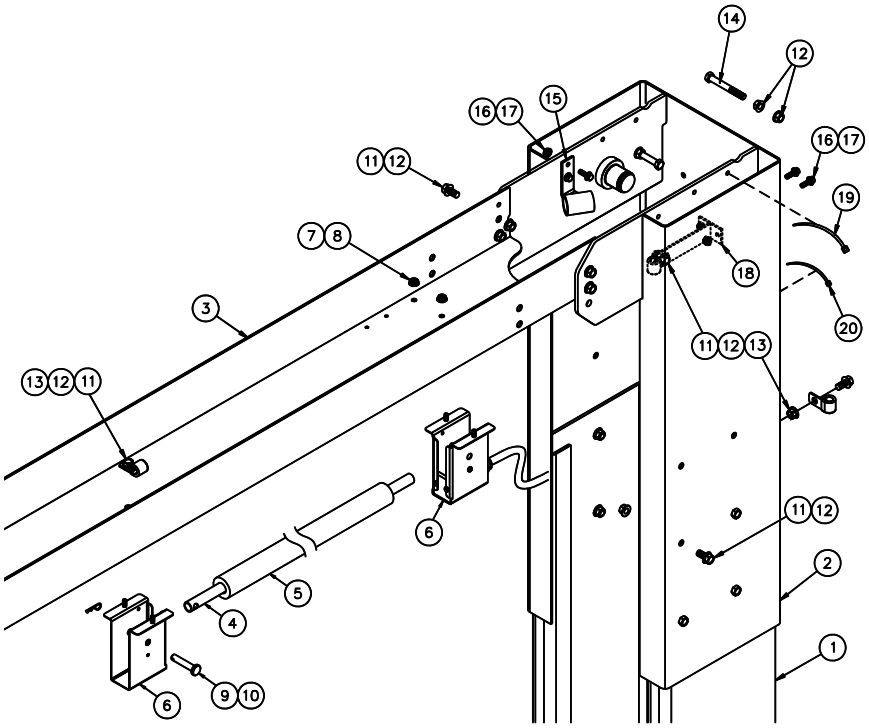

ITEM #	PART #	QTY/LIFT	DESCRIPTION
1	12810-P	1	POWER COLUMN WELD
	12810-I		IDLER COLUMN WELD
2	12821-143	2	COLUMN EXTENSION WELD FOR CL12A-LC
	12821-164		COLUMN EXTENSION WELD FOR CL12A-0
	12821-176		COLUMN EXTENSION WELD FOR CL12A-1
	12821-188		COLUMN EXTENSION WELD FOR CL12A-2
3	12815	1	OVERHEAD
4	A2067	1	SHUTOFF BAR
5	31129	1	SHUTOFF BAR CUSHION
6	B2064-01	1	LIMIT SWITCH PACKAGE
			(INCLUDES SWITCH w/ CORD, BOTH BRACKETS, & ITEMS 7-10)
7	B2065-3	4	M6 x 14mm PHILLIPS PAN HEAD SCREW
8	B2065-4	4	M6 SERRATED FLANGE HEX NUT
9	B2065-5	1	CLEVIS PIN 10mm x 55 Lg.
10	GJY12-3	1	HAIRPIN COTTER
11	A1153	30	3/8-16NC HEX. FLG. HD. C.S x ¾" Lg.
12	A1154	38	3/8-16NC HEX. FLG. NUT
13	A1122-12	2	HYD. HOSE CLAMP
14	A2159	4	3/8-16NC x 3" Lg. HEX HEAD CAP SCREW
15	12825	2	HOSE GUIDE BRACKET (PIPE)
16	A2125	8	1/4-20NC x 3/4" Lg. SER. FLG. CAP SCREW
17	40085	8	1/4-20NC HEX. FLG. NUT
18	12750	2	HOSE SUPPORT BRACKET (T)
19	40346	8	ZIP TIE 8" Lg. (FOR PENDANT CORDS, DPC ONLY)
20	31118	4	ZIP TIE 3 1/2" Lg. (FOR LOCK RELEASE CABLE)

Replace all worn, damaged, or broken parts with parts approved by ***Challenger Lifts Inc.***
or with parts meeting ***Challenger Lifts Inc.*** specifications.
Contact your local Challenger Lifts Parts Distributor for pricing and availability.
(Call ***Challenger Lifts Inc.*** (502) 625-0700 for the Parts Distributor in your area)

PARTS BREAKDOWN (continued)

Fig B. Lock-Power/Idler

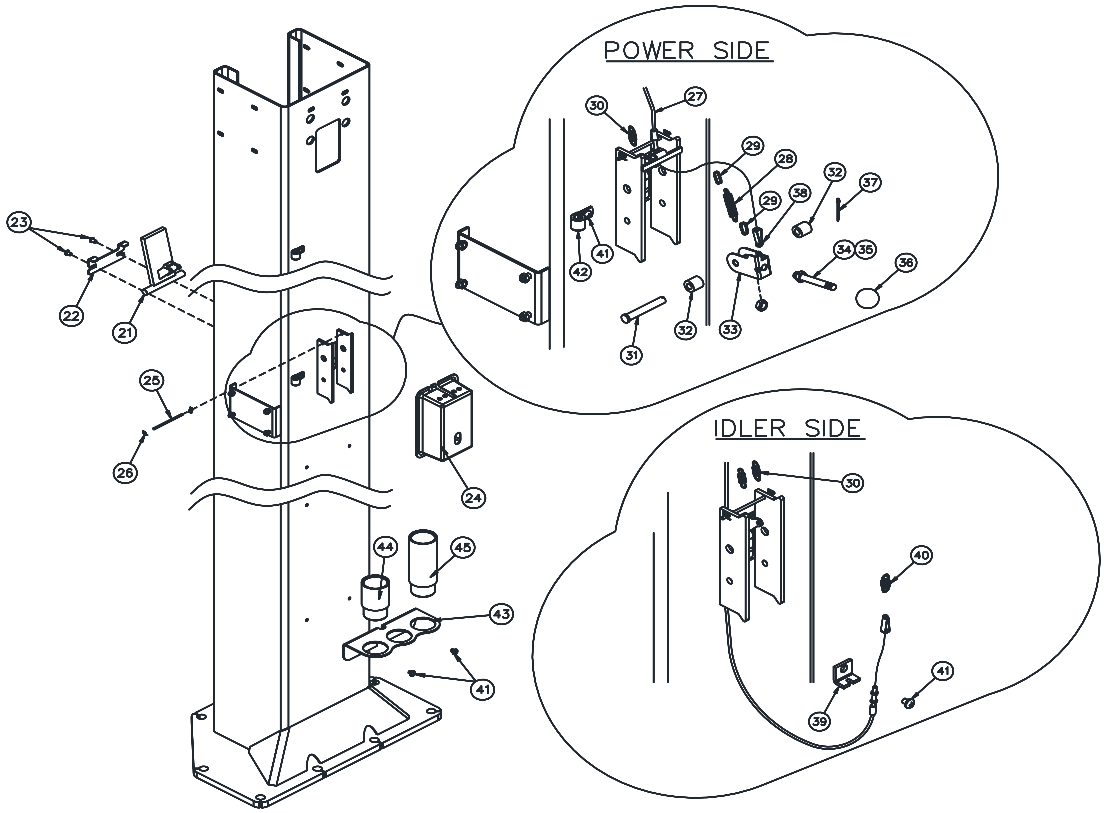

ITEM #	PART #	QTY/LIFT	DESCRIPTION
21	12616	2	LOCK WELD
22	12518	2	LOCK RETAINER
23	10335	4	5/16-18x3/8Lg Phillip Pan Hd Screw
24	37072	2	LOCK COVER
25	37042	2	PIVOT ROD
26	37031	4	5/32 SPEED NUT
27	12804-LC	1	LOCK RELEASE CABLE ASSEMBLY (CL12A-LC)
	12804-0		LOCK RELEASE CABLE ASSEMBLY (CL12A-0)
	12804-1		LOCK RELEASE CABLE ASSEMBLY (CL12A-1)
	12804-2		LOCK RELEASE CABLE ASSEMBLY (CL12A-2)
28	12715	1	3/8” O.D. LONG EXTENSION SPRING
29	12716	2	D-RING CONNECTOR LINK
30	A1131	3	3/8” O.D. EXTENSION SPRING
31	12654	1	3/8” x 3 ¼” LONG CLEVIS PIN
32	12658	2	NYLON SPACER
33	A1142-12	1	LOCK RELEASE CLEVIS
34	A1134	1	STUD HANDLE
35	A1143	2	3/8”-16 HEX JAM NUT
36	36096	1	BALL HANDLE
37	40126	1	1/8” x 1 ½” COTTER PIN
38	37119	1	CLEVIS PIN KIT
39	A1130-02	1	LOCK CABLE MOUNTING TAB (BLACK)
40	A1132	1	1/2" O.D. SHORT EXTENSION SPRING
41	10335	7	5/16-18NC x 3/8” Lg. PHILLIPS PAN HEAD SCREW
42	A1122-12	2	HYD. HOSE CLAMP
43	B2209	2	ADAPTER ORGANIZER RACK
44	B2206-3	4	STACK ADAPTER EXTENSION – 3”
45	B2206-6	2	STACK ADAPTER EXTENSION – 6”

Replace all worn, damaged, or broken parts with parts approved by ***Challenger Lifts Inc.***
or with parts meeting ***Challenger Lifts Inc.*** specifications.
Contact your local Challenger Lifts Parts Distributor for pricing and availability.
(Call *Challenger Lifts Inc.* (502) 625-0700 for the Parts Distributor in your area)

PARTS BREAKDOWN (continued)

Fig C. Hydraulics

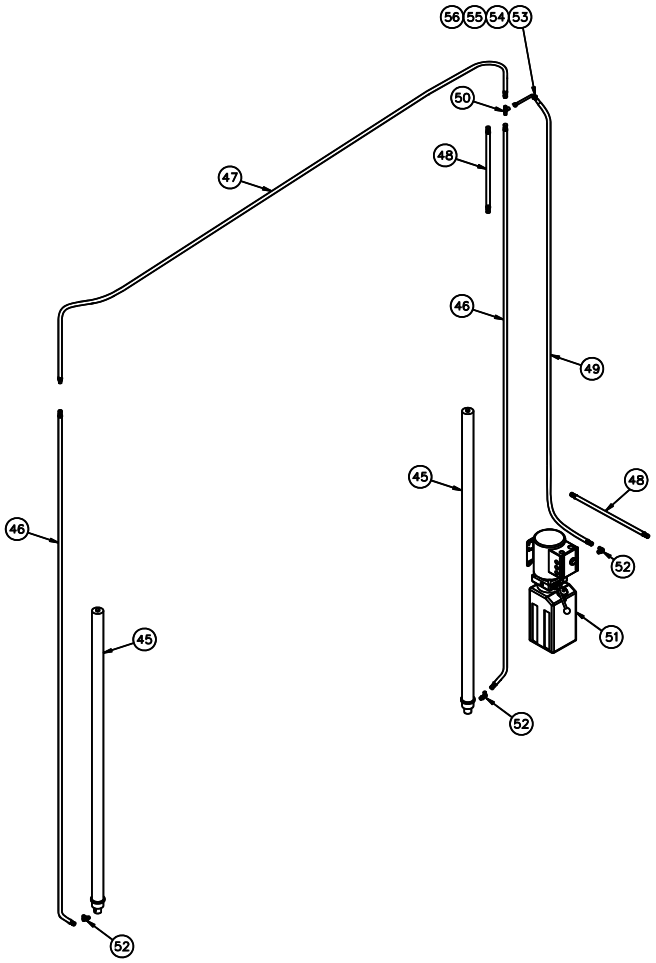

ITEM #	PART #	QTY/LIFT	DESCRIPTION
45	16138R-QC	2	HYD. RAM CYLINDER (68” STROKE) (CL12A-LC-QC ONLY)
	39097R-QC	2	HYD. RAM CYLINDER (72” STROKE) (CL12A-1-QC, CL12A-2-QC, or CL12A-3-QC)
46	12791-LC	2	COLUMN HOSE (LOW CEILING HEIGHT, LENGTH 130”)
	12791-0		COLUMN HOSE (STD. HEIGHT, LENGTH 151")
47	12816	1	OVERHEAD HOSE (STD. HEIGHT, LENGTH 187")
48	12539-012	2	1 FT. HOSE EXTENSION (CL12A-1, LENGTH 12”)
	12539-024		2 FT. HOSE EXTENSION (CL12A-2, LENGTH 24”)
49	12793-LC	1	POWER UNIT HOSE (LOW CEILING HEIGHT, LENGTH 73”)
	12793-0		POWER UNIT HOSE (STD.HEIGHT, LENGTH 88”)
50	39103	1	TEE FITTING
51	AB-9858	1	POWER UNIT 1 PHASE
	AD-9858-2		POWER UNIT 3 PHASE
	AB-11530		POWER UNIT QC
52	16167	3	90 DEG. O-RING ELBOW
53	31025	1	LINE CLAMP
54	12748	1	1/4 x 1/4 NYLON SPACER
55	A2125	1	1/4-20 x 3/4” HEX FLANGE HEAD CAP SCREW
56	40085	1	1/4-20 HEX FLANGE NUT

Replace all worn, damaged, or broken parts with parts approved by ***Challenger Lifts Inc.*** or with parts meeting ***Challenger Lifts Inc.*** specifications.
Contact your local Challenger Lifts Parts Distributor for pricing and availability.
(Call ***Challenger Lifts Inc.*** (502) 625-0700 for the Parts Distributor in your area)

PARTS BREAKDOWN (continued)

Fig D. Synchronizer

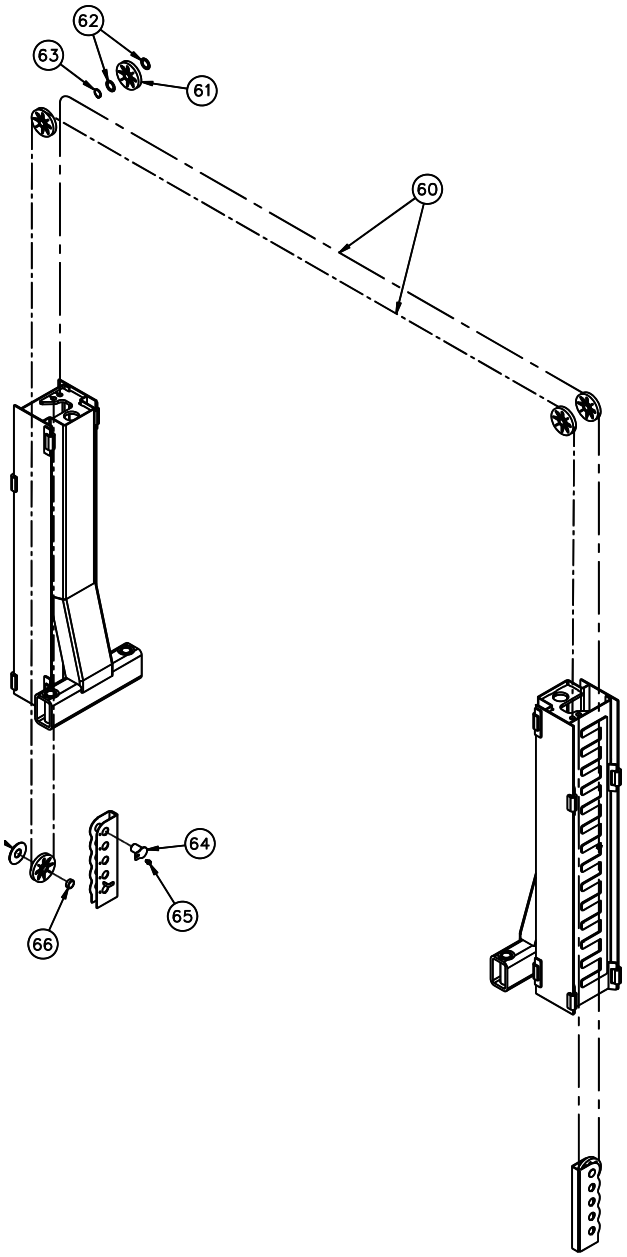

ITEM #	PART #	QTY/LIFT	DESCRIPTION
60	12803-LC	1	SYNC. CABLE PACK (CL12A-LC) (Set of 2)
	12803-0	1	SYNC. CABLE PACK (CL12A-0) (Set of 2)
	12803-1	1	SYNC. CABLE PACK (CL12A-1) (Set of 2)
	12803-2	1	SYNC. CABLE PACK (CL12A-2) (Set of 2)
61	CL12760	6	SHEAVE ASSEMBLY
62	CL31020	8	WASHER
63	CL31021	4	1 3/8” RETAINING RING
64	12326	2	SHEAVE PIN
65	4100342	2	5/16-18NC x 1/2" Lg. LOCK HEX FLG. HD.CAP SCREW
66	40774-S	2	SHEAVE SPACER 3/8”
67	40053	2	1/8” THICK BEARING

Replace all worn, damaged, or broken parts with parts approved by ***Challenger Lifts Inc.***
or with parts meeting ***Challenger Lifts Inc.*** specifications.
Contact your local Challenger Lifts Parts Distributor for pricing and availability.
(Call ***Challenger Lifts Inc.*** (502) 625-0700 for the Parts Distributor in your area)

PARTS BREAKDOWN (continued)

Fig E. Carriage & Arms

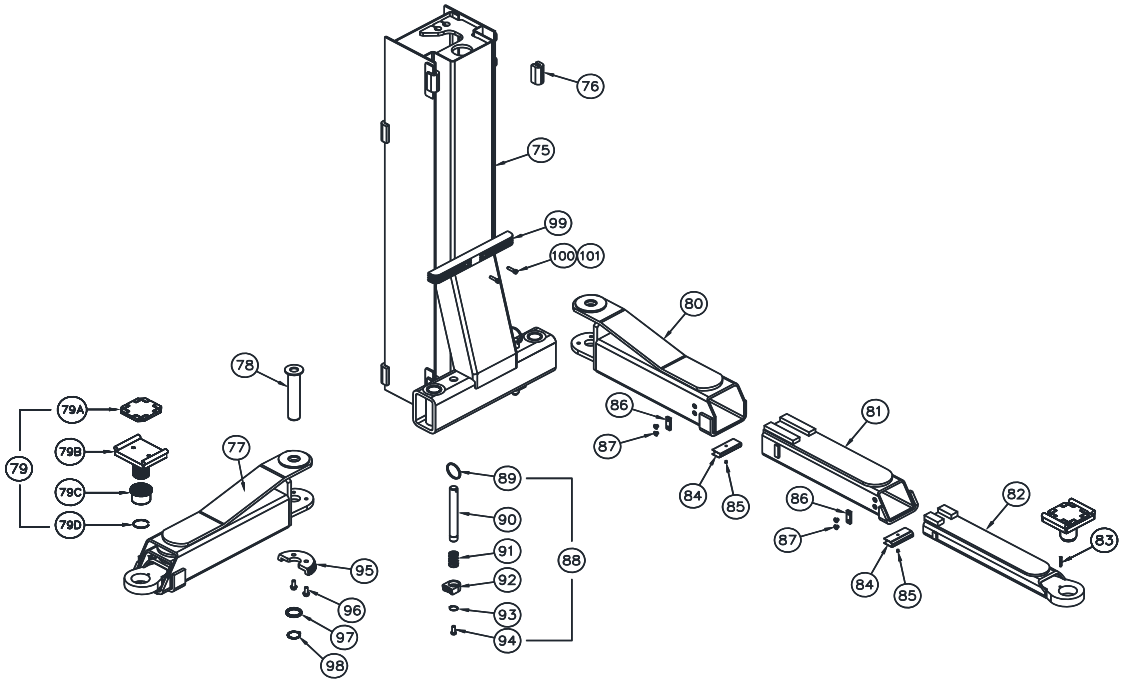

ITEM #	PART #	QTY/LIFT	DESCRIPTION
75	B12621	2	CARRIAGE WELD
76	31023	16	SLIDE BLOCK ASSEMBLY
77	B12800B	4	3-STAGE ARM ASSEMBLY (includes Items 78 thru 87)
78	B12544	4	ARM PIN WELD
79	B12162S-12	4	FOOT PAD ASSEMBLY – 12K
79A	*A1104-H*	4	*Pad*
79B	*B12163S*	4	*ADAPTER PAD WELD*
79D	*B17276-1*	4	*ADAPTER BASE*
79E	*B17257*	4	*3 x 45mm RETAINING RING*
80	B12801	4	FEMALE ARM WELD
81	B12802	4	INTERMEDIATE ARM WELD
82	B12803	4	MALE ARM WELD
83	B2211	4	ROLL PIN-Ø6 x 30mm Lg.
84	B12805	8	ARM SHIM
85	B12807	8	M6x6 BUTTON HEAD CAP SCREW
86	3W-04-18	8	STOP BLOCK
87	17350	16	M8x10 FLAT HEAD BOLT, CL8.8
88	A1077TC-12	4	ARM RESTRAINT SHAFT ASSEMBLY (includes items 89 thru 94)
89	A1075	4	PULL RING
90	12583	4	ARM RESTRAINT SHAFT
91	31109	4	COMPRESSION SPRING
92	A1072TC	4	OUTER GEAR
93	36014	4	1” EXTERNAL RETAINING RING
94	12568	4	3/8-16NC HEX FLANGE HEAD CAP SCREW
95	A1070TC	4	INNER GEAR
96	B1068	8	M10x25 HEX FLANGE HEAD BOLT
97	B2203S-01D	4	39mm ID, 51mm OD Washer
98	B1083	4	38mm External Retaining Ring
99	B2026-2	2	DOOR GUARD
100	X10-088	4	M8 x 1.25 x 30mm SHCS
101	X10-087	4	M8 WASHER

Replace all worn, damaged, or broken parts with parts approved by ***Challenger Lifts Inc.***
or with parts meeting ***Challenger Lifts Inc.*** specifications.
Contact your local Challenger Lifts Parts Distributor for pricing and availability.
(Call ***Challenger Lifts Inc***. (502) 625-0700 for the Parts Distributor in your area)

REVISIONS

2023/02/10 – ADDED QC RISE TIMES TO GENERAL SPECIFICATIONS ON PAGE 2
2023/02/28 – CORRECTED OVERHEAD HYDRAULIC HOSE, P/N 12816, AND ADDED QC CYLINDER P/N'S ON PAGE 20 AND CORRECTED SYNCHRONIZER PART CALLOUTS ON PAGE 21
2023/07/24 – ADDED WIDTH ADJUSTMENT DIMENSION TO FIG.8.
2023/11/13 – UPDATED ALI REFERENCES, UPDATED ANCHORING INSTRUCTIONS Pg. 7.
2024/03/15 – ADDED ANSI STANDARDS REFERENCE STATEMENT SECTION. PG. 4.
2024/09/25 – UPDATED ANSI/ALI REFERENCE STATEMENT.
2024/10/24 – UPDATED WIRING DIAGRAM TO INCLUDE NEW RELAY.
2025/04/07 – UPDATED GENERAL SPECIFICATIONS TABLE. PG. 2
2025/08/21 – ADDED PART X10-087 TO PARTS BREAK DOWN.
2025/09/12 – UPDATED PARTS BREAKDOWN WITH BUCHER POWER UNIT.
2026/02/12 – UPDATED PARTS BREAKDOWN.
2026/03/16 – UPDATED WIRING DIAGRAM TO INCLUDE QUICK CYCLE.