Installation, Operation & Maintenance Manual

Four Post

Surface Mounted Lift

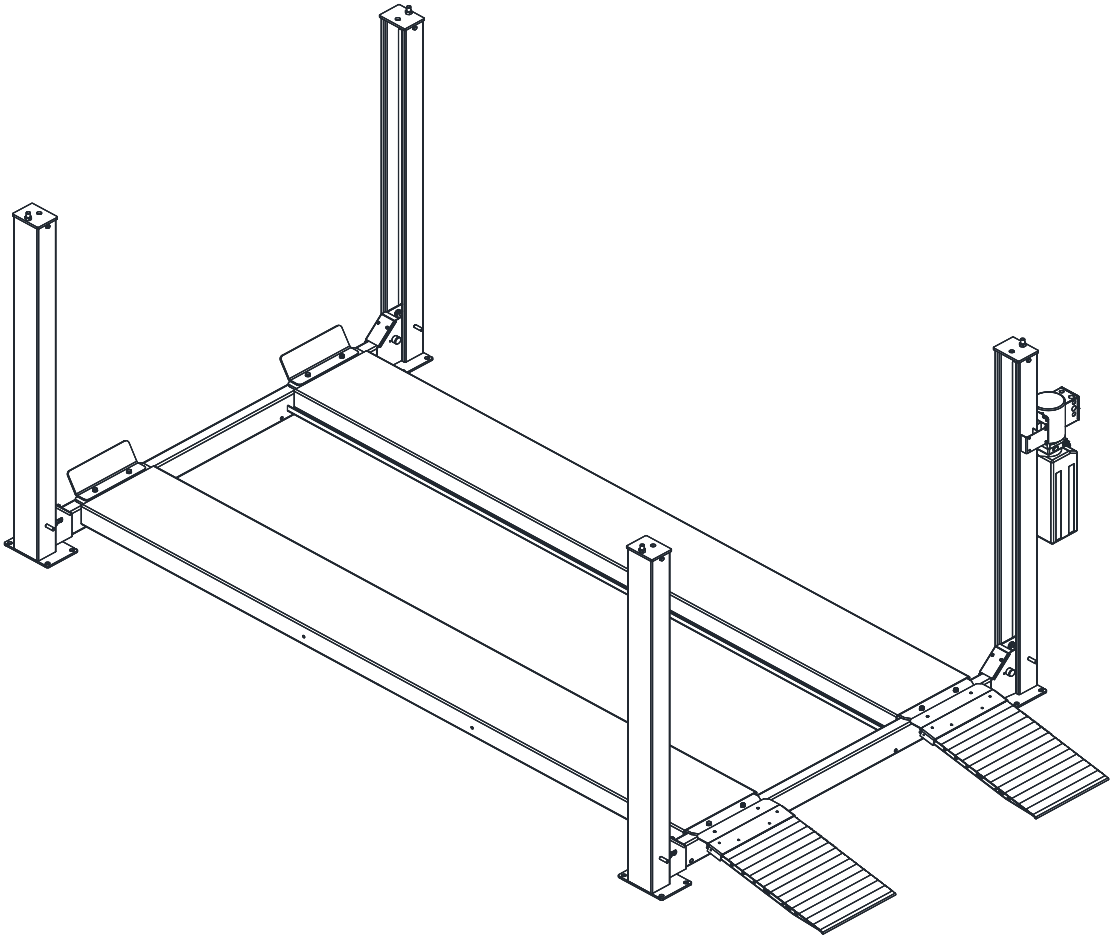

Models CL4P7

(7,000 lb. Capacity)

2311 South Park Rd Louisville, Kentucky 40219
Email: Challengerlifts@soe.freshdesk.com Phone: 800-648-5438

IMPORTANT: **READ THIS MANUAL COMPLETELY BEFORE INSTALLING or OPERATING LIFT**

Rev. 2026/06/10

General Specifications

SPECIFICATIONS	CL4P7
A Length Overall	195½" [16'-3 1/2"]
B Width Overall	100 1/2" (8'-4 1/2")
C Inside Columns	92 1/8"
D Between Columns	147 ½" [12'-3 1/2"]
E Height of Columns	79 1/2"
F Height of Runway, Floor to runway top	5 ¾" min – 70 1/2" max
G Width of Runways	20"
H Width Between Runways	38"
I Rise Height of Runway Top at Top Lock Position. (allow 2-3/8" of clearance above top vehicle for lock release)	68-1/8"
Clear Height Underneath Runway (top lock position)	63"
J Length, Base Plate to Base Plate	165" (13'- 9")
K Maximum Wheelbase (Based on tire Diameter of 30")	141.5"
Lifting Capacity (Hydraulic Pressure at Cap.)	7,000 lbs. (2600 psi)
Motor: HP/Voltage, Single Phase Std.	1HP/115v or 2HP/230v
Rise Time (approximate)	120 Seconds/115v or 60 seconds/230v
Runway Length (not including mounting flange)	150 1/2"

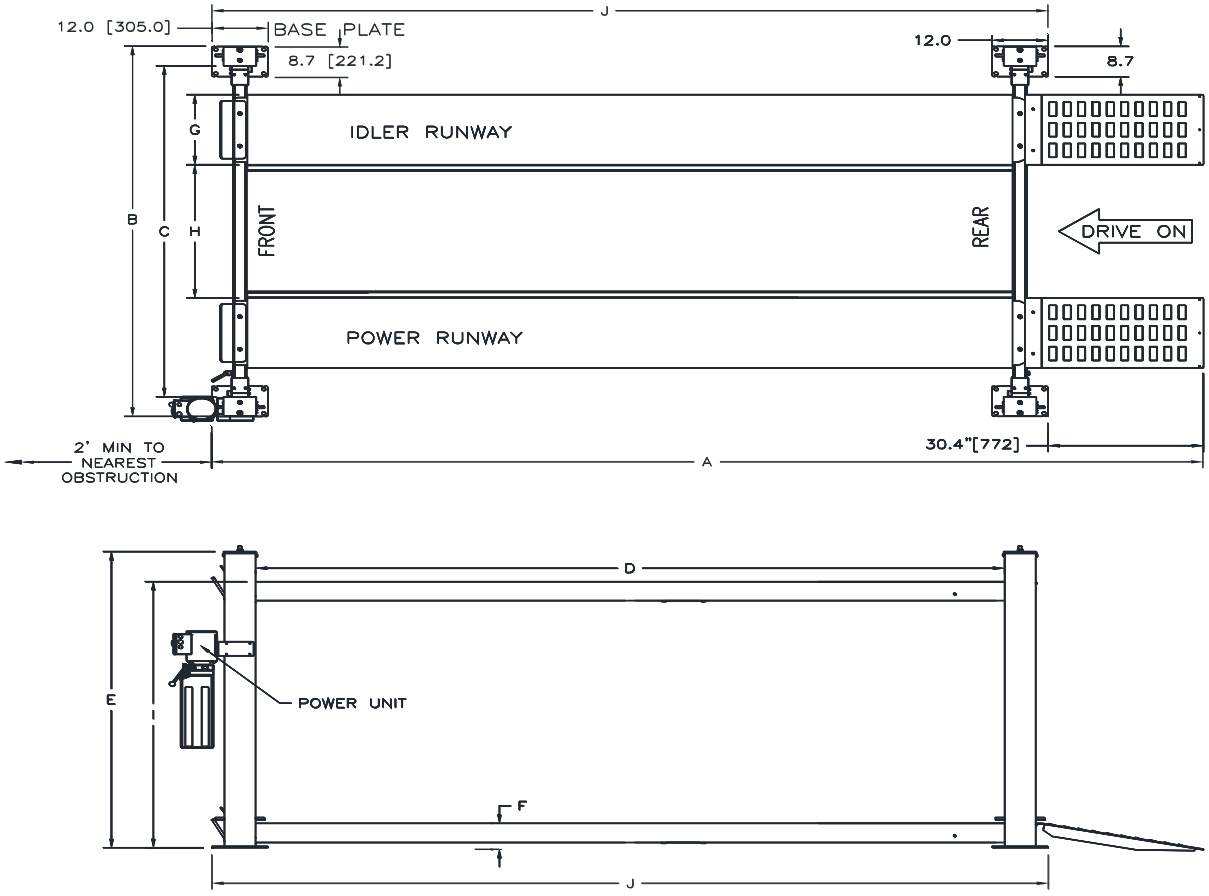

Fig 1 – General Specifications and Service Bay Layout
(Power Unit location: Left Front as Shown or Right Rear)

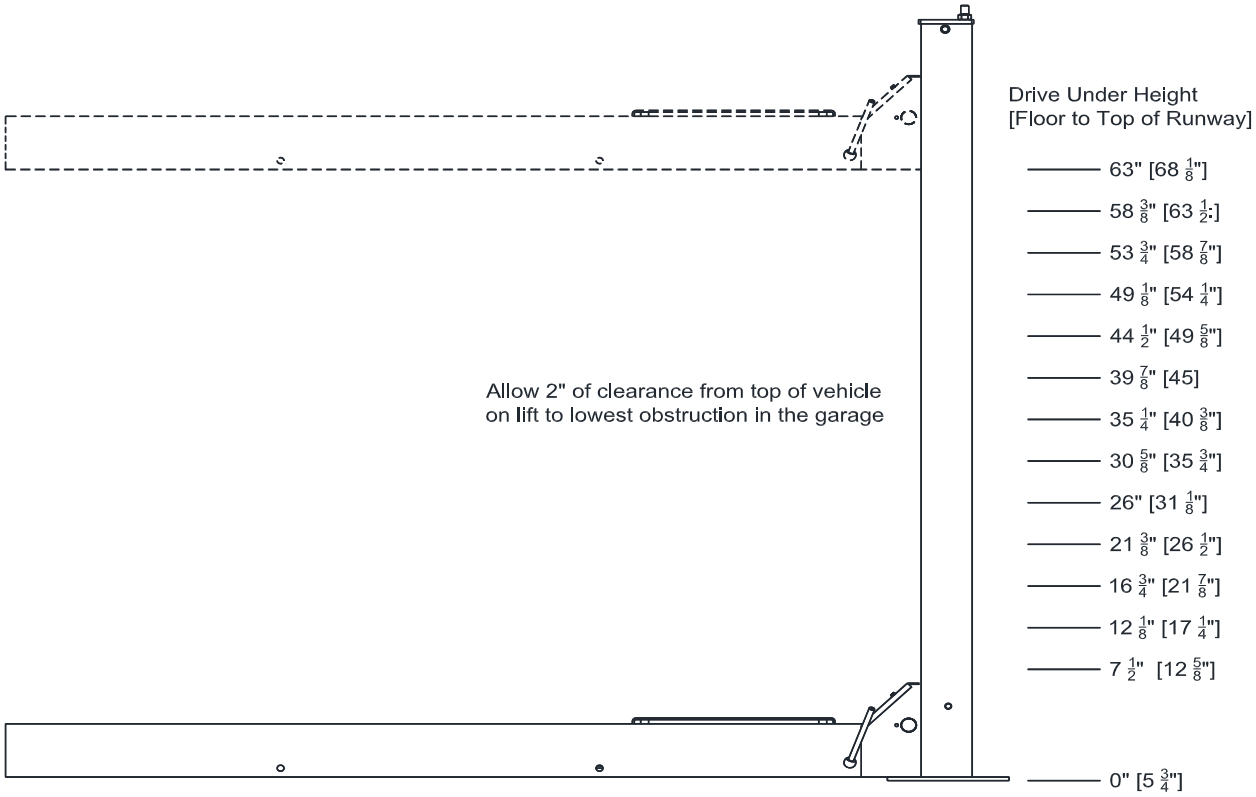

Fig 2 – Drive Under Height (On Locks)

Vertical Clearance

Check the height of the area where the lift is to be installed. Clearance should be calculated based on the full raised height of the lift.

WARNING **Failure by purchaser to provide adequate clearance could result in unsatisfactory lift performance, property damage, or personal injury.**

Flooring

Be certain you have the proper concrete floor to properly handle the loaded lift. Floor should be in generally good condition with no large cracks, spalling or deterioration.

Minimum requirements for concrete are 4 inches minimum depth, with steel reinforcement, 3500 psi, cured for 28 days per local commercial practice. This lift is designed to accommodate a 3-inch total variation in elevation at the base of the four posts. Floor should be level within 1/2 inch from side-to-side and 2 1/2 front-to-rear to avoid special shimming. No anchors should be installed within 8 inches of any crack, edge, or expansion joint. If these conditions cannot be met, a pad may be poured to accommodate the lift.

A qualified person should be consulted to address seismic loads and other local or state requirements.

WARNING **Failure by purchaser to provide the recommended mounting surface could result in unsatisfactory lift performance, property damage, or personal injury.**

Location

This lift has been evaluated for indoor use only with an operating ambient temp. range of 5 – 40°C (41-104°F)

Electrical Requirements

For lift installation and operation with standard power unit, it is necessary to have a dedicated 115V single-phase 60-cycle circuit with a 20-amp circuit breaker or time delay fuse.

For lift installation and operation with 230V power unit, refer to **Fig 24**.

Safety Notices and Decals

For your safety, and the safety of others, read and understand all of the safety notices and decals included here.

Read entire manual before assembling, installing, operating, or servicing this equipment.

Proper maintenance and inspection is necessary for safe operation.

DO NOT operate a damaged lift.

Safety decals similar to those shown here are found on a properly installed lift. Be sure that all safety decals have been correctly installed on the columns as described in this installation manual. Verify that all authorized operators know the location of these decals and fully understand their meaning. Replace worn, faded, or damaged decals promptly.

WARNING **Do not attempt to raise a vehicle on the lift until the lift has been correctly installed and adjusted as described in this manual.**

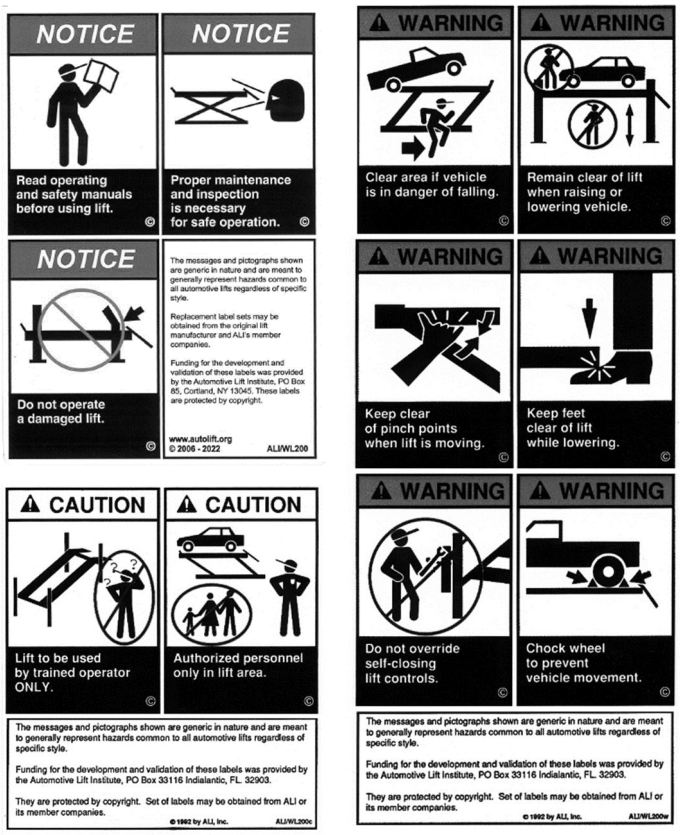

Receiving

The shipment should be thoroughly inspected as soon as it is received. The signed bill of lading is acknowledgement by the carrier of receipt in good condition of shipment covered by our invoice.

If any of the goods called for on this bill of lading are shorted or damaged, do not accept them until the carrier makes a notation on the freight bill of the shorted or damaged goods. Do this for your own protection.

NOTIFY ***Challenger Lifts*** AT ONCE if any hidden loss or damage is discovered after receipt.

IT IS DIFFICULT TO COLLECT FOR LOSS OR DAMAGE AFTER YOU HAVE GIVEN THE CARRIER A CLEAR RECEIPT.

File your claim with ***Challenger Lifts*** promptly. Support your claim with copies of the bill of lading, freight bill, and photographs, if available.

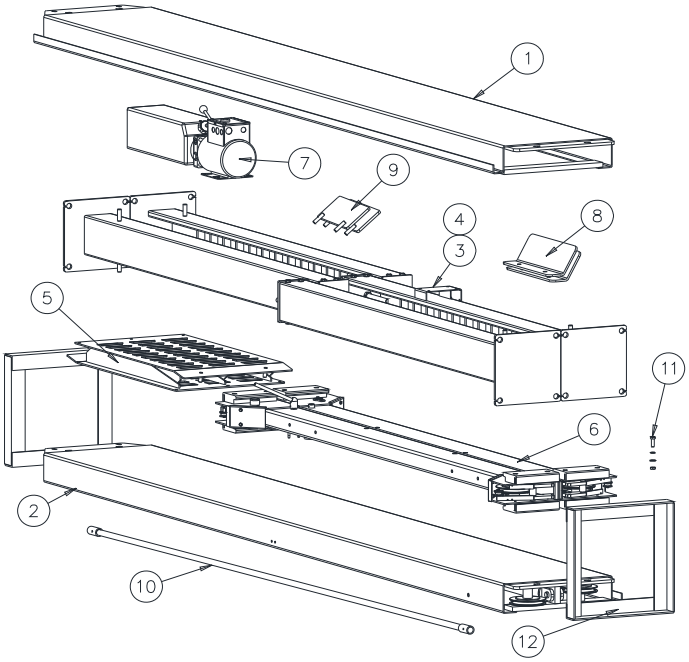

Fig 3 – Package Components

ACCEPTED OILS – Do not use oils with detergents

Hydraulic fluid is not provided with the lift shipment.

-10 wt. anti-foam, anti-rust hydraulic / biodegradable oil

-Dexron III ATF

Edition of Standards Referenced

Where any ANSI standard or ALI materials are referenced within this manual, the most recent edition shall apply.

Component Packing List

ITEM #	QTY/ LIFT	DESCRIPTION
1	1	IDLER RUNWAY ASS'Y
2	1	POWER RUNWAY ASS'Y
3	1	POWER COLUMN ASS'Y
4	3	IDLER COLUMN ASS'Y
5	2	ENTRANCE RAMP
6	2	CROSS BEAM ASS'Y
7	1	POWER UNIT
8	2	FRONT WHEEL STOP
9	2	REAR WHEEL STOP
10	1	MECHANICAL LOCK BAR
11	8	SHIPPING HARDWARE
12	2	SHIPPING BRACKET WELD

INSTALLATION

SAFETY REQUIREMENTS FOR INSTALLATION AND SERVICE

Refer to ANSI/ALI ALIS (current edition)

IMPORTANT: Always wear safety glasses while installing lift.

TOOLS (MINIMUM REQUIRED)

a. Tape measure, 25ft.
b. Chalk line.
c. 4ft level.
d. 10" & 12" adjustable wrench.
e. Standard open-end wrenches.
f. 6mm allen wrench.
g. Box knife.
h. Thread locking compound.
i. Needle nose pliers.
j. Hammer drill with 3/4" diameter carbide tipped bits *(Optional).*
k. 2lb hammer.
l. Torque wrench: 150-foot pounds minimum with 1 1/8" socket *(Optional).*
m. 8 ft. Step ladder.
n. Blocking – (4) 4x4x30", (4) 1x4x12".
o. Transit for leveling alignment lift.

LAYOUT

1) Lay out the service bay according to the architect's plans or owners' instructions ***(see Fig 1***). Be certain that the proper conditions exist, see pages 2 & 3.
2) Unpack lift. Remove all packaging from Power Runway (power runway has four cable sheaves at rear end) and pull threaded cable ends out. Make sure the cables are in the proper sheaves at the 4-stack, **Fig 6**.
3) Remove the mechanical lock bar from the Idler Runway.

4) Check the lock release bar to ensure it is secure and that the lock pawl is in the correct position as shown in **Fig 4**. Adjust if necessary. Verify the lock moves freely and make sure the lock pawl return spring doesn't over-travel and interfere with Lock Ladder.

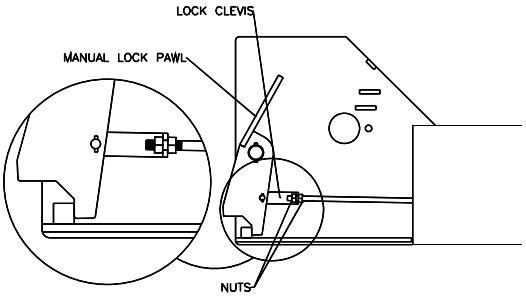

Fig 4 – Lock Clevis

Columns

5) Remove the top cap and ladder bar from each column assembly and place the columns close to each corner per layout (**Column with the power unit bracket goes at the front left column position per Fig 1**).
6) With the runways spaced per **Fig 1**, lay the cross beams on the runway per **Fig 5** below. Place cardboard between the runway and cross beam. Slide the column over the ends of the slide blocks on the cross beam. Repeat for each column.
7) With help, stand up the front and rear column/cross beam assemblies.

***TIP**: Hydraulic Cylinder must be extended prior to attaching cables to columns.*

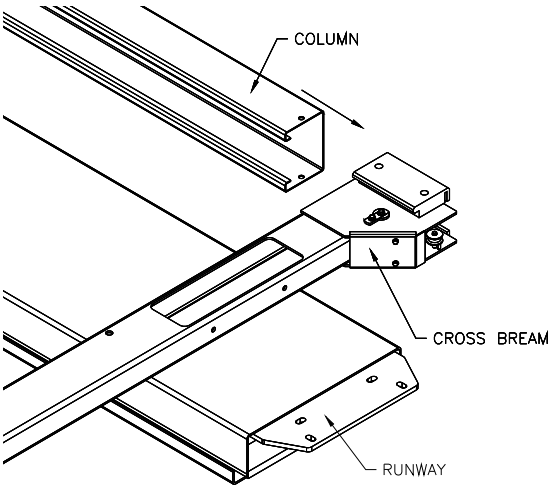

Fig 5 – Column/Cross Beam Assembly

Runway Layout

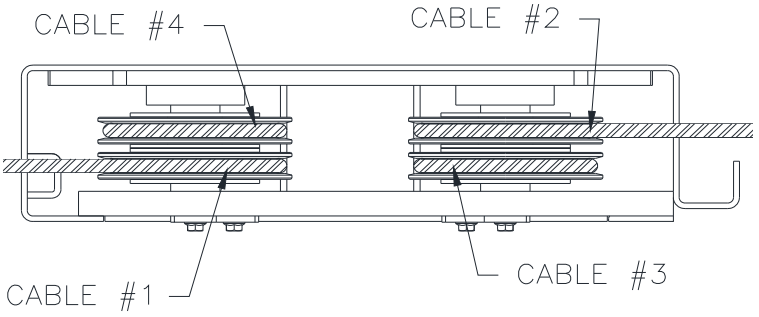

Fig 6 – Power Runway 4-Stack (Rear View)

8) Position runways on blocking ***(see Fig 7)*** per layout lines established in step 1. Use four 30" long 4x4's spanning the width of the runway and four 12" long 1x4's to shim up the jack-rail side of the runway. Cable #1 & #2 should be extending out from the rear of the power runway and cable #3 & #4 from the front of the power runway, **Fig 7**.
9) Position the front and rear cross beams, **Fig 7**.

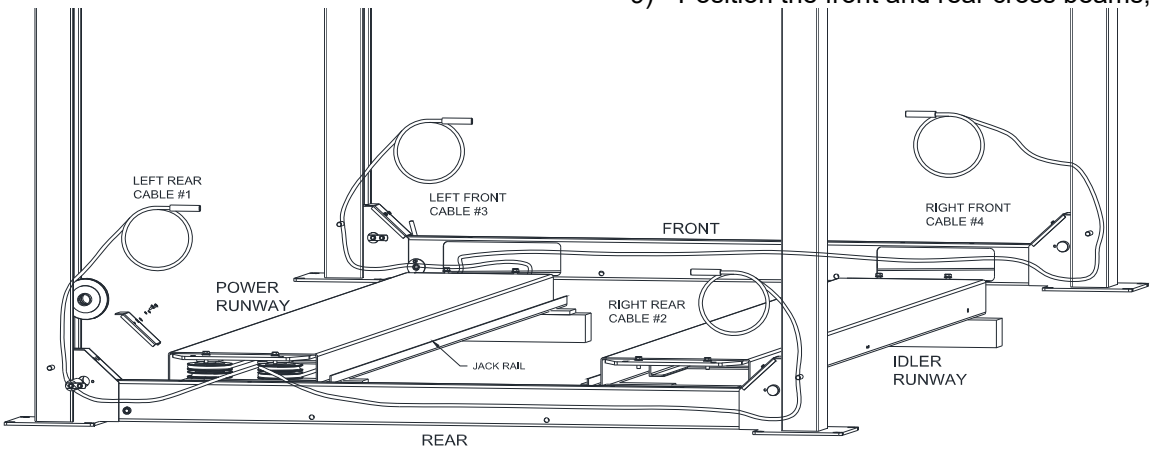

Fig 7 – Runway Layout

10) Remove the four (4) cross beam sheaves (one sheave from each beam end). DO NOT REMOVE THE RUNWAY SHEAVE PINS.
11) Place the mechanical lock release rod into the saddles located on the inside of the cross beams, **Fig 8**.

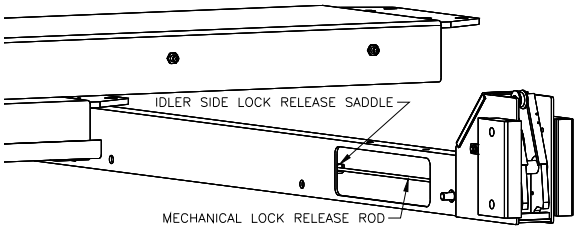

Fig 8 – Mechanical Lock Rod

WARNING **MAKE SURE THE CABLES ARE NOT TANGLED WITH THE LOCK RELEASE ROD INSIDE THE CROSSBEAM.**

12) From the rear, route cable #1 from the bottom of the left sheave stack through the access hole and up out the left end of the rear cross beam. Repeat for cable #2 from the top of the right rear sheave stack through the access hole and up out the right rear of the rear cross beam, **Fig 6** & **7. *MAKE SURE THE CABLES ARE NOT TANGLED WITH THE LOCK RELEASE ROD INSIDE THE CROSSBEAM.***
13) At the rear of the power runway, continue routing cables #3 & #4 to the front of the power runway sheaves, **Fig 9**.
14) At the front of the power runway continue routing cable #3 around the sheave and out the front drivers' side cross beam. Cable #4 should be routed around the sheave & out to the passenger side front cross beam, **Fig 9 & Fig 10**. ***MAKE SURE THE CABLES ARE NOT TANGLED WITH THE LOCK RELEASE ROD INSIDE THE CROSSBEAM.***

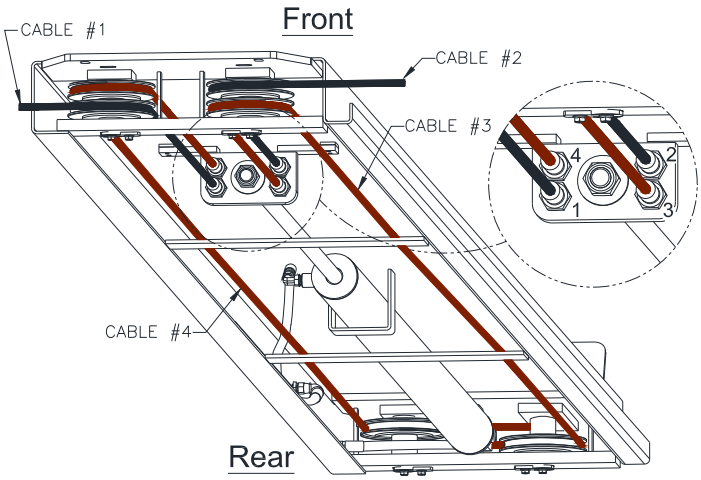

Fig 9 – Cable Layout

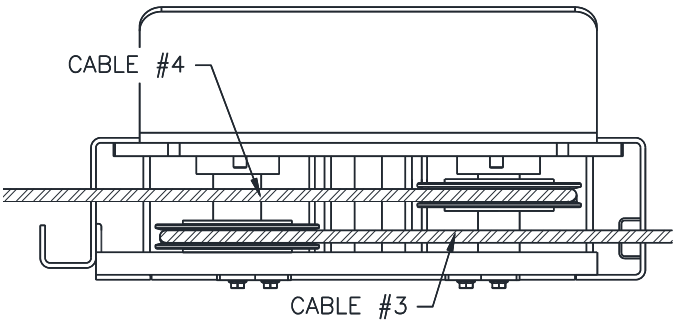

Fig 10 – Power Runway (Front View)

15) Look through the power end of the cross beam and ensure that cables have not crossed.
16) Reinstall the crossbeam sheaves with one plastic bearing washer and spacer on each side of each sheave. Make sure the cables are routed correctly around the slack cable latch roller, per **Figure A.**

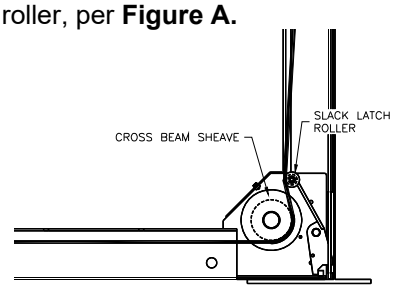

Figure A – Slack Cable Routing

17) Attach both cross beams to the runways with M12 x 35mm lg. bolts, lock washers and washers (two at each end of each runway). Install front wheel stops at the front of both runways. Do not torque bolts yet.
18) Check the layout of the lift in the bay. If anchoring the lift, this is the last chance to make adjustments. Adjust the position of the runways so the distance from power side jack rail to idler side jack rail is the same at the front and the rear and the diagonal measurements from the front tip of one rail to rear tip of the opposite rail are within 1/8", **Fig 12.**

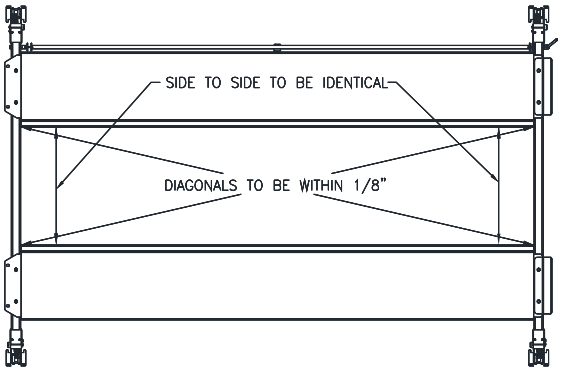

Fig 12 – Final Runway Positioning

19) Center cross beam bolts with slots in runway and tighten. (Be careful not to move runways.)

20) Reassembly the lock ladder and top cap to column. Note: the lock ladder is offset from the center of the threaded rod and orientate per **Fig 13**.

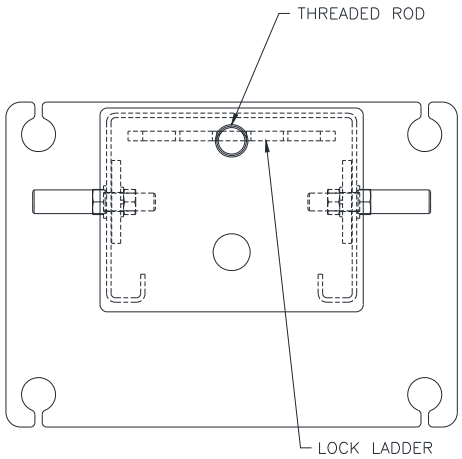

Fig 13 – Locking Ladder Orientation

21) Adjust the lock ladder so about 2” remains sticking out of the top. Tighten both bolts as shown in **Fig 14** when ladder is properly orientated. Note: When adjusting the lock ladder, it may be necessary to loosen or remove the bolts holding the top cap to the column so the bottom nut can be adjusted.

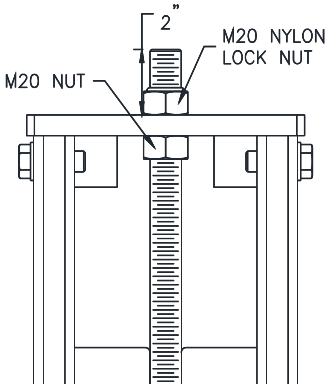

Fig 14 – Lock Ladder Assembly

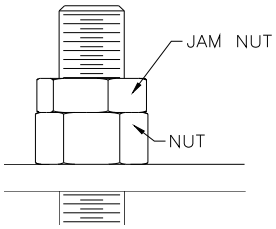

Fig 11 – Cable Jam Nut

22) Secure the cables to the top of the column with the nut and jam nut provided, **Fig 11**.
23) Repeat for the remaining three columns.

Anchoring *(Optional)*

NOTE: Lift must be anchored in place if slope is greater than 1/8” per 1 foot.

24) The anchor bolts must be installed at least 8” from any crack, edge, or expansion joint.
25) Use a concrete hammer drill with a 3/4-inch carbide bit. Tip diameter should conform to ANSI Standard B212.15 (.775 to .787). Do not use excessively worn bits or bits which have been incorrectly sharpened. A core bit may be necessary if an obstruction is encountered. **Never substitute with shorter anchor.**
26) Drill the anchor holes using the base plate as a template. Drill through the floor if possible or to a depth of 5 inches minimum.
27) Vacuum dust from the hole for proper holding power.
28) Shim columns to plumb using the shims provided or steel washers. DO NOT shim more than 1/2" at any given point. Use a level no less than 24” in length to plumb columns.
29) Assemble washer and nut to anchor with nut just below impact section of bolt. Drive anchor into hole until nut and washer contact base. Tighten anchor bolts and recheck column for plumb. Re-shim as required.

NOTE: Level bubble should not only be between the lines, the bubble should be <u>centered</u> between the lines. If shims do not allow sufficient centering of the bubble, it is best to lean the rear columns in the direction toward each other and the front columns in the direction toward each other.

30) Install the four cable ends with one load lock nut, and one jam nut.

Power Unit

31) Install the Power Unit to the column using the supplied M8x20mm bolts and M8 nuts. The power unit can be installed on either the front or side of the power column to suit install location, shown in **Fig 15**.

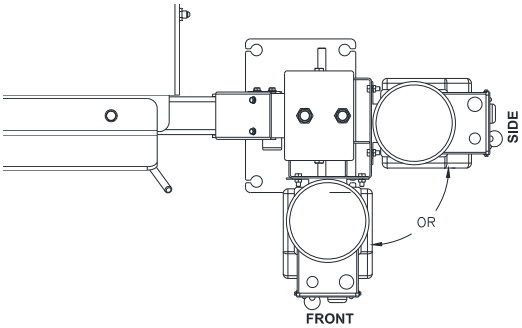

Fig 15 – Power Unit

32) For installs on the front of the column **(Fig 16)**, rout the power unit supply line to the bulkhead shown below. Attach the 90-degree fitting at a slight angle downward and secure the hose to the fitting.

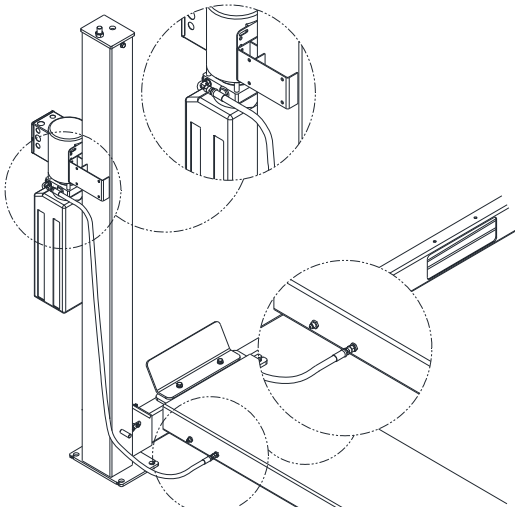

Fig 16 – Supply Line, Front

33) Remove the 3/8-18 NPT plug on the side of the power unit and attach the 90-degree elbow at a slightly downward angle. Secure the hose to the bulkhead shown in **Fig 17**.

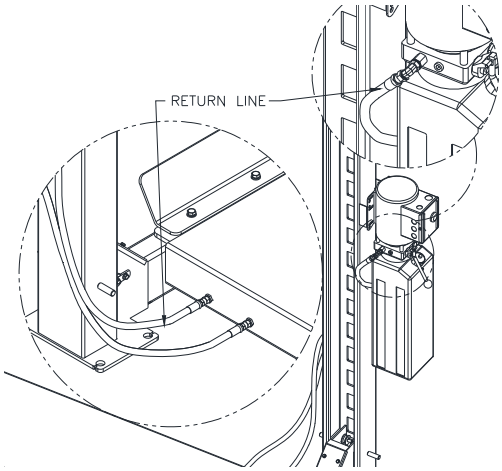

Fig 17 – Return Line, Front

34) For installs with the power unit on the side of the column route the supply line to the bulkhead shown in **Fig 18**.

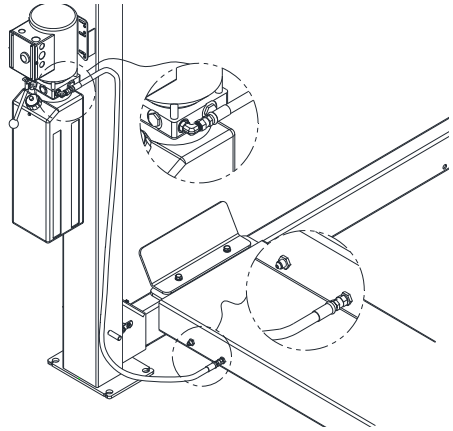

Fig 18 – Supply Line, Side

35) Remove the 3/8-18 NPT plug on the side of the power unit and attach the 90-degree elbow, **Fig 19**.

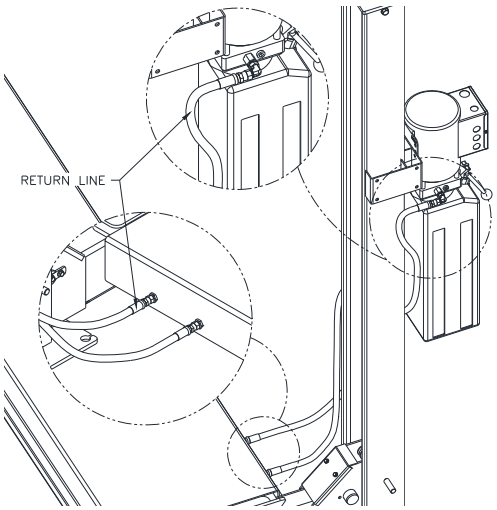

Fig 19 – Return Line, Side

NOTE: When attaching the return line to the bulkhead in the runway, make sure it is securely attached at the power unit, and the hose is not twisted or kinked into a position that will lead to getting caught on the power unit reservoir or the stud on the column sides. Raise the lift and carefully watch the path the hose is riding up the column, adjust connection at the power unit and/or runway bulkhead to allow the hose to move up between the power unit and column. Make sure the hose doesn't catch on the column caster lug as the lift rises...

36) Install O-Ring end of the straight hydraulic fitting (9/16-18 O-Ring x M14x1.5-6g) to power unit output port. Connect the hydraulic hose to the hydraulic bulkhead fitting in the power runway.

Do Not Use Teflon Tape or Pipe Dope on fittings.

37) Connect the power unit to a suitable electrical power source. The standard power unit is 115-volt 50/60 Hz single phase requiring a dedicated single throw circuit breaker to operate lift at full capacity. For 230V power unit, refer to **Fig 22**.

38) **BE CERTAIN ALL FITTINGS AND CONNECTIONS ARE TIGHT. IT IS THE INSTALLERS RESPONSIBILITY TO ENSURE SYSTEM IS LEAK-FREE.** Fill the Power Unit with three gallons of clean 10wt anti-foam anti-rust hydraulic oil or Dexron III ATF. **DO NOT USE OILS WITH DETERGENTS.**

39) Energize the power unit and raise the lift approximately 1 ft off the ground and look underneath the power runway to verify that the cable lugs are resting firmly against the cylinder pull bar and all cables are routed properly, riding in sheaves correctly and not crossed.

40) Raise lift to working height and lower lift onto locks. Attach the mechanical lock bar to both cross beams using the hairpin cotter pins, make sure the lock bar is positioned onto the saddle/hook inside the runway. **Verify the mechanical lock release moves freely, and lock pawl return spring doesn't interfere with Lock Ladder. (See Fig 4)**

41) To level the runways and crossbeams use a 4 ft. level. With the lift resting in its locks, find the highest corner and adjust the other three column ladder bars until the runways are level front-to-rear and side-to-side. Tighten jam nut against bottom side of each column top plate.

42) Adjust cables until all four locks are synchronized when lift is raised. Tighten cable jam nuts against adjustment nuts.

43) Raise and lower lift several times to bleed hydraulic cylinder. Hydraulic cylinder is self-bleeding. Lower lift and check fluid level in reservoir. Add fluid as needed.

44) Run lift to full rise and continue running motor approximately 5 more seconds. Check hydraulic hose and connections for leaks. Re-tighten fitting if leaking.

COLUMN DECAL PLACEMENT

45) Center the decal on the front drivers' side column and rear passenger side column.

46) Apply decal 4" from top of columns, **Fig 20**.

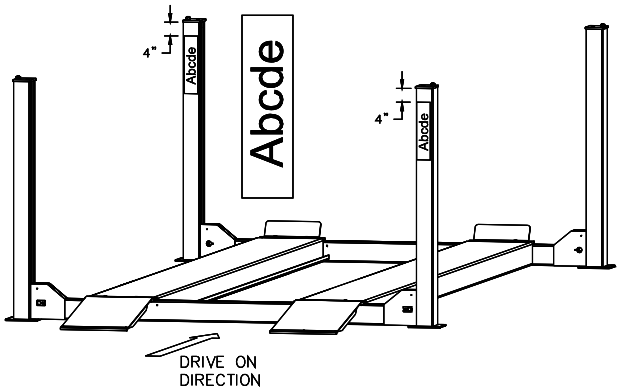

Fig 20 – Decal Placement

47) Place the Caution, Warning and Safety Instructions decals seen on page 4, on the power column as shown, **Fig 21**.

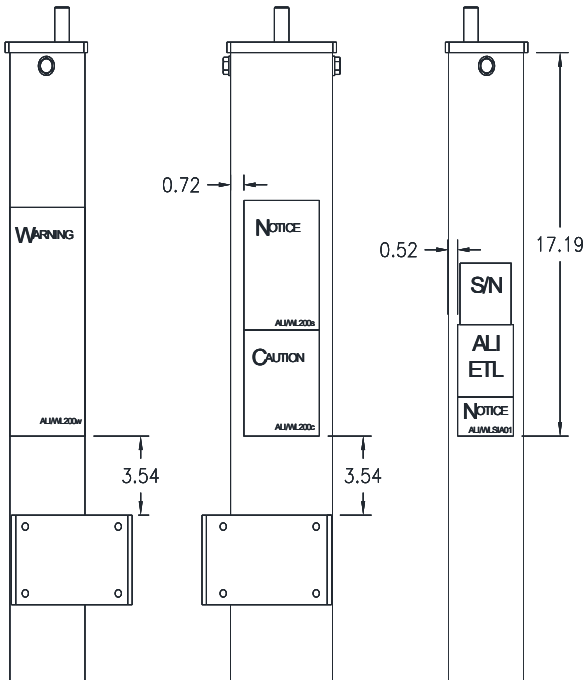

Fig 21 – POWER COLUMN LABEL LOCATION

OWNER/OPERATOR CHECKLIST

SAVE THESE INSTRUCTIONS deliver them to owner/user/employee along with other materials furnished with this lift.

48) Demonstrate the operation of the lift to the owner/operator and review correct and safe lifting procedures using the **Lifting It Right** booklet as a guide.

49) Return all provided literature (including this manual) to the literature pack envelope and deliver the envelope to the owner/operator/employer.

50) Complete the online warranty registration (refer to the included warranty statement).

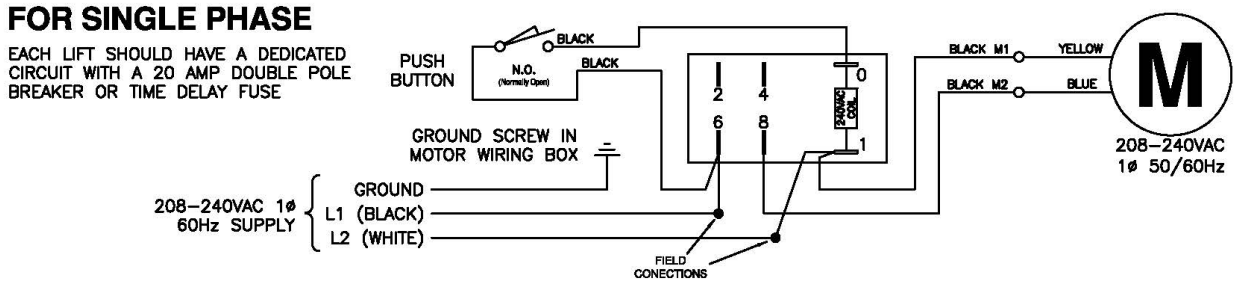

Fig 22 – NON-STANDARD 230V WIRING DIAGRAM

OPERATION PROCEDURE

SAFETY NOTICES AND DECALS

This product is furnished with graphic safety warning labels, which are reproduced on page 3 of these instructions. Do not remove or deface these warning labels or allow them to be removed or defaced. For your safety, and the safety of others, read and understand all of the safety notices and decals included.

OWNER/EMPLOYER RESPONSIBILITIES

This lift has been designed and constructed according to ANSI/ALI ALCTV standard. The standard applies to lift manufacturers, as well as to owners and employers. The owner/employer's responsibilities as prescribed by ANSI/ALI ALOIM, are summarized below. For exact wording refer to the actual standard provided with this manual in the literature pack.

The Owner/Employer shall ensure that lift operators are qualified and that they are trained in the safe use and operation of the lift using the manufacturer's operating instructions; ALI/SM, *ALI Lifting it Right safety manual*; ALI/ST, *ALI Safety Tips card*; ANSI/ALI ALOIM, *American National Standard for Automotive Lifts-Safety Requirements for Operation, Inspection and Maintenance*; ALI/WL Series, *ALI Uniform Warning Label Decals/Placards*; and in case of frame engaging lifts, ALI/LP-GUIDE, *Vehicle Lifting Points/Quick Reference Guide for Frame Engaging Lifts*.

The Owner/Employer shall establish procedures to periodically inspect the lift in accordance with the lift manufacturer's instructions or ANSI/ALI ALOIM, *American National Standard for Automotive Lifts-Safety Requirements for Operation, Inspection and Maintenance*; and the employer shall ensure that the lift inspectors are qualified and that they are adequately trained in the inspection of the lift.

The Owner/Employer shall establish procedures to periodically maintain the lift in accordance with the lift manufacturer's instructions or ANSI/ALI ALOIM, *American National Standard for Automotive Lifts-Safety Requirements for Operation, Inspection and Maintenance*; and the employer shall ensure that the lift maintenance personnel are qualified and that they are adequately trained in the maintenance of the lift.

The Owner/Employer shall maintain the periodic inspection and maintenance records recommended by the manufacturer or ANSI/ALI ALOIM, *American National Standard for Automotive Lifts-Safety Requirements for Operation, Inspection and Maintenance.*

The Owner/Employer shall display the lift manufacturer's operating instructions; ALI/SM, *ALI Lifting it Right safety manual*; ALI/ST, *ALI Safety Tips card*; ANSI/ALI ALOIM, *American National Standard for Automotive Lifts-Safety Requirements for Operation, Inspection and Maintenance;* and in the case of frame engaging lift, ALI/LP-GUIDE, *Vehicle Lifting Points/Quick Reference Guide for Frame Engaging Lifts*; in a conspicuous location in the lift area convenient to the operator.

IMPORTANT SAFETY INSTRUCTIONS

When using your garage equipment, basic safety precautions should always be followed, including the following:

1. Read all instructions.
2. Care must be taken as burns can occur from touching hot parts.
3. To reduce the risk of fire, do not operate equipment in the vicinity of open containers of flammable liquids (gasoline).
4. Keep hair, loose clothing, fingers, and all parts of body away from moving parts.
5. Use only as described in this manual. Use only manufacturer's recommended attachments.
6. ALWAYS WEAR SAFETY GLASSES. Everyday eyeglasses only have impact resistant lenses, they are not safety glasses.

SAVE THESE INSTRUCTIONS

Lifting a Vehicle

Place entrance ramps in the slotted holes on the front of the ramp. Drive vehicle onto lift. Set parking brake. Remove entrance ramps before lifting, and install removable wheel stops with Wheel Side decal as shown in **Fig 23**.

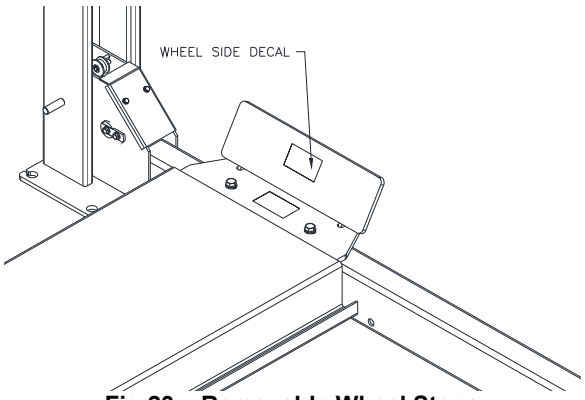

Fig 23 – Removable Wheel Stops

When the vehicle has reached the desired working height, release the power pack button, and lower the vehicle until the locks are engaged. The vehicle should remain level when all locks are engaged. If one side engages and the other continues to descend, stop lowering the vehicle, raise it several inches, and try again to engage locks.

IMPORTANT, before walking under the lift ensure that all locks are properly engaged.

It is not safe to work under the vehicle unless all locks are engaged, and the vehicle is level.

Lowering a vehicle

Ensure that the area under the vehicle is clear of personnel and tools.

Raise the vehicle until locks are free.

Disengage the locks by rotating the mechanical lock handle clockwise.

Lower the vehicle by depressing the lowering valve handle and continue to hold mechanical lock handle to keep locks disengaged. Watch lift to ensure that the lift is lowering evenly. If not, raise lift and check all locks to ensure they are disengaged before trying to lower lift again.

Continue to lower the vehicle until the crossbeams stop against the base plate. It is important to fully lower the lift to release hydraulic pressure on the system.

Loss of power

If for any reason, the lift will not raise off the locks or the locks will not retract, consult factory authorized personnel.

DO NOT OVERRIDE ANY SAFETY FEATURE IN AN ATTEMPT TO LOWER THE LIFT.

Maintenance

To avoid personal injury, permit only qualified personnel to perform maintenance on this equipment. Maintenance personnel should follow lockout/tagout instructions per ANSI Z244.1.

The following maintenance points are suggested as the basis of a routine maintenance program. The actual maintenance program should be tailored to the installation and include a record of each planned maintenance activity and repair maintenance activity performed. Refer to the maintenance section of the ANSI/ALI ALOIM booklet (blue book) provided with the lift.

- If lift stops short of full rise or chatters, check fluid level per Installation Instructions.
- Replace all Safety, Warning or Caution Labels if missing or damaged. (***See Installation instructions page 3***.)

Daily

- Keep lift components clean.
- Check for loose or broken parts.
- Check hydraulic system for fluid leaks.
- Check lock release activation.

Weekly

- Check cables and sheaves for wear or damage. Replace as required with genuine **Challenger Lifts** parts.
- Inspect lock mechanism for proper function.

Monthly

- Torque concrete anchor bolts to 80 ft-lbs.
- Clean and inspect cables and sheaves for wear or damage. Lubricate cables and sheaves with light oil.
- Visually inspect concrete floor for cracks and/or spalls within 12” of base plate
- Adjust cables so locks engage simultaneously while raising, this will vary with load

IMPORTANT! Failure to keep lift free of corrosive agents and solvents will lead to reduced service life, which could result in property damage and/or personal injury.

If any problems are encountered, contact your local service representative.

Optional Accessories

Oil Drip Tray (Q4P09DT)

1) Place drip tray between runways in the Jack rail, **Fig 24**.
2) Slide along jack rail until it's in desired location.

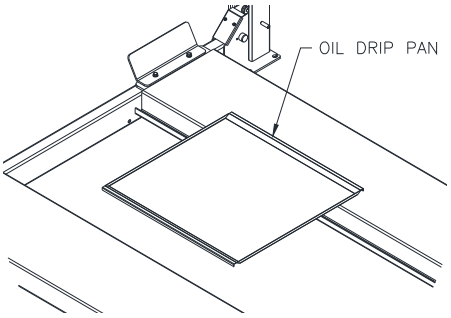

Fig 24 – Oil Drip Tray

Storage Platform (Q4P09SP)

1) Up to four Storage Platforms can be placed between the runways, **Fig 25**.

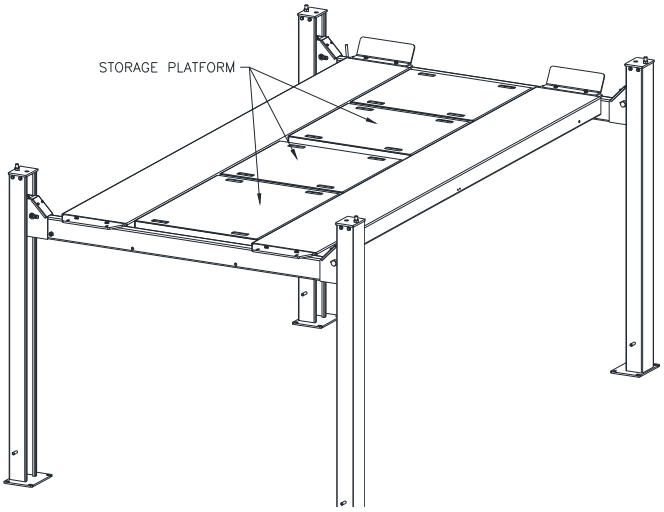

Fig 25 – Storage Platform

Jack Platform (Q4P09JT)

1) The Jack Platform rest on the jack rails between the runways. It can be positioned as needed along the rail, **Fig 26**.

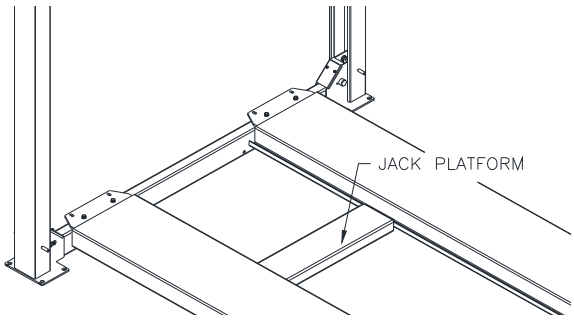

Fig 26 – Jack Platform

Mobility Kit (Q4P09CS)

1) This set of four casters, when attached to the cross beams of an unloaded lift, **Fig 27**, pick the lift up and allow it to be rolled to a different location.

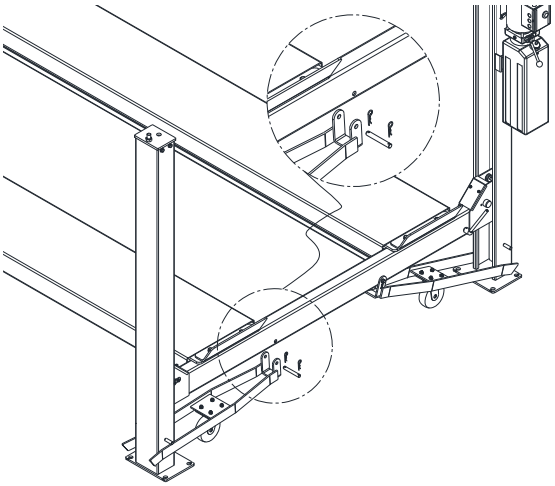

Fig 27 – Mobility Kit

Hand Operated Rolling Jack (QRJ03H)

1) Move the jack into under vehicle and extend the arms to the pick-up points.
2) Make sure the lowering valve is closed all the way by turning the knob clockwise, **Fig 28**.
3) Raise vehicle desired height, rest the jack in one of the jack locks.
4) To lower, pump the jack to raise it enough to disengage the lock, and turn the lowering knob counterclockwise.

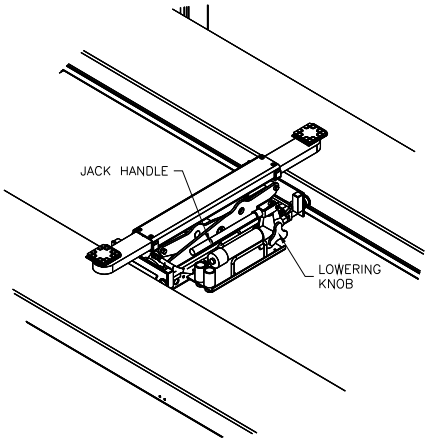

Fig 28 – Rolling Jack

Extended Aluminum Ramps (Q4P09ER)

1) Install in the runway by placing the two studs in the slotted holes.
2) Remove before raising the lift.

Parts Breakdown

Models CL4P7

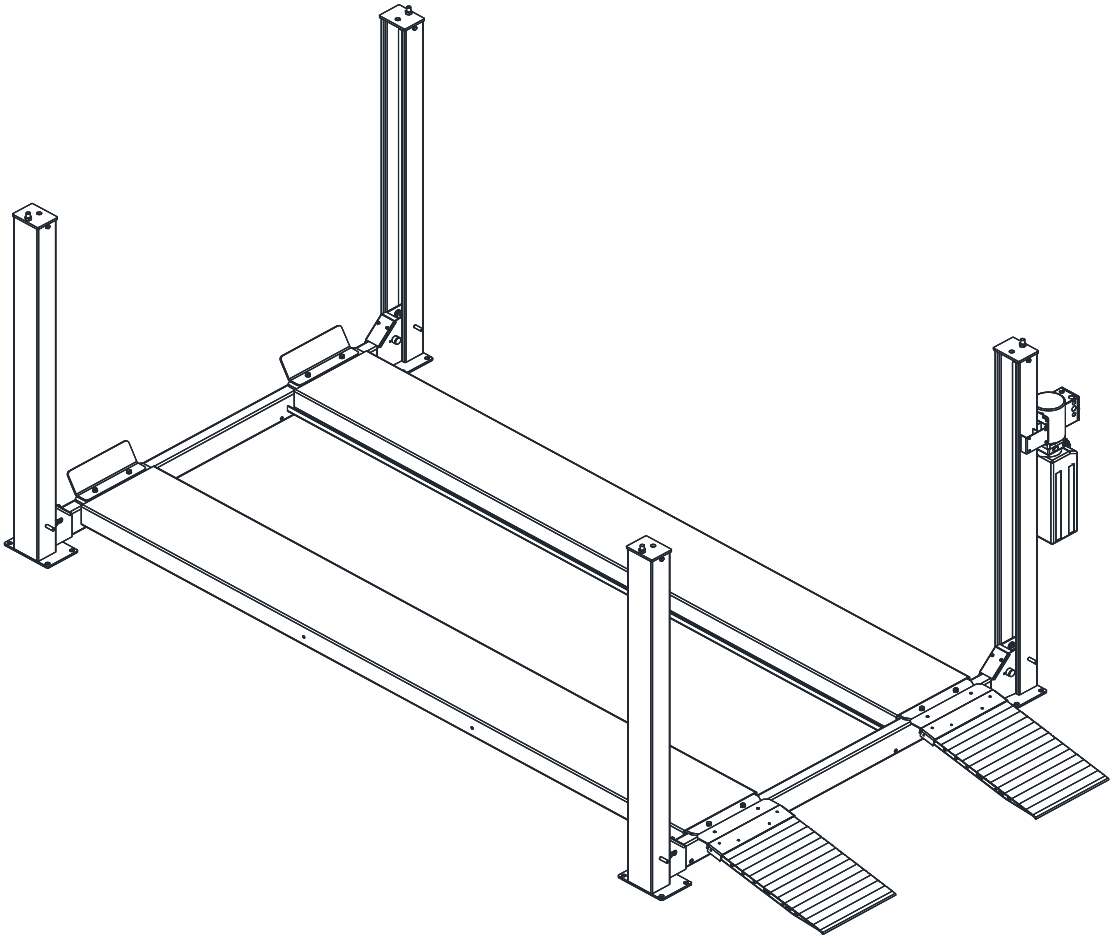

IMPORTANT!!!

Replace all worn, damaged, or broken parts with parts approved by ***Challenger Lifts Inc.*** or with parts meeting ***Challenger Lifts Inc.*** specifications. Contact your local Challenger Lifts Parts Distributor for pricing and availability.

(Call Challenger Lifts Inc. (502) 625-0700 for the Parts Distributor in your area)

Parts Breakdown

Fig A. General Layout

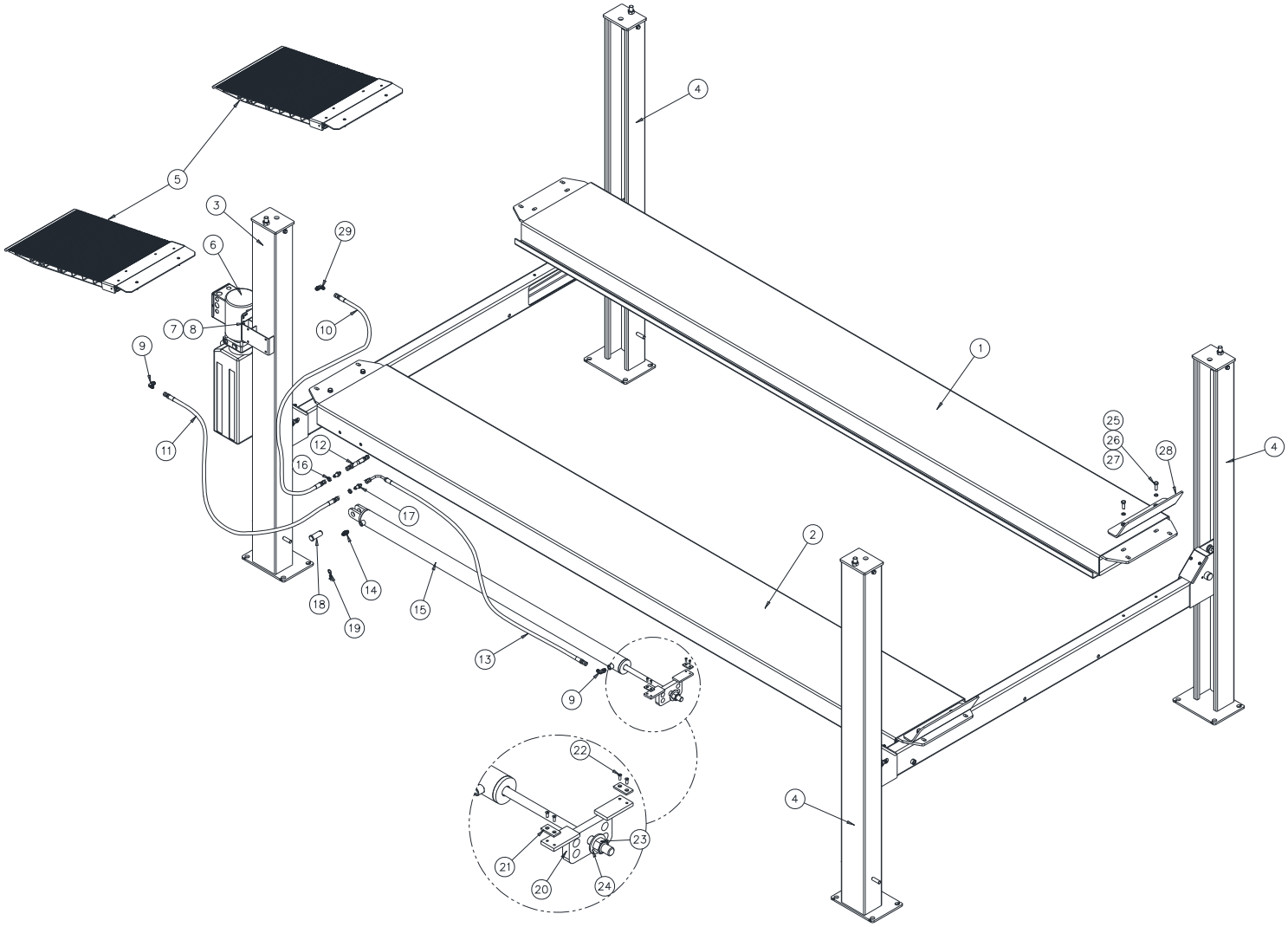

ITEM #	PART #	QTY/LIFT	DESCRIPTION
1	TCS3.5-08-01-00	1	IDLER RUNWAY WELD
2	TCS3.5-07-01-00	1	POWER RUNWAY WELD
3	TCS3-5-01-00-02	1	POWER COLUMN ASSEMBLY (Column, Lock Ladder, Top Cap)
4	TCS3-5-02-00-02	3	IDLER COLUMN ASSEMBLY (Column, Lock Ladder, Top Cap)
5	TCS4-09-00B	2	ENTRANCE RAMPS
6	AB-7816-1-DLH	1	POWER UNIT, 115v, SINGLE PHASE, 50/60Hz
	AB-9367-DLH		POWER UNIT, 230v, SINGLE PHASE, 50/60Hz
7	X10-048	4	M8 NUT
8	MR6-007	4	M8 x 20mm Lg. HEX HD CAP SCREW
9	TCS4-13	2	9/16 O-RING x M14x1.5 90 DEGREE HYD. FITTING
10	TCS4-15	1	HOSE – RETURN (91”)
11	JSZ5-5-10-04	1	HOSE – SUPPLY (67”)
12	TCS4-07-08	1	HOSE – SHORT RETURN
13	JSZ5-5-10-03	1	HOSE - HYDRAULIC CYLINDER
14	TCS4-07-07	1	STRAIGHT HYD. FITTING
15	TCS3-5-03-00	1	HYDRAULIC CYLINDER ASSEMBLY
16	JSZ5-5-10-06	2	M14x1.5 BULKHEAD NUT
17	JSZ5-5-10-05	2	M14 BULKHEAD FITTING
18	B40082	1	CLEVIS PIN
19	B40126	1	1/8 x 1½” Lg. COTTER PIN
20	TCS4-07-05-00	1	CABLE PULL BAR
21	JSZ5-5-03-03-03	2	CABLE PULL BAR SLIDE BLOCKS
22	Q4P09-001	4	M6 x 20mm Lg. COUNTER SUNK SCREWS
23	Q4P09-002	1	M24 NYLON LOCK NUT
24	Q4P09-003	1	M24 WASHER
25	B40083	8	M12 x 35mm Lg. HEX FLG. HD. CAP SCREW
26	X10-039	8	M12 LOCK WASHER
27	X10-038	8	M12 WASHER
28	40266	2	WHEEL STOP
29	JSJ3-10-05	1	3/8-18 NPT x M14x1.5 90 DEGREE HYD. FITTING
30	TCS4-12-00	2	REMOVABLE WHEEL STOP

Replace all worn, damaged, or broken parts with parts approved by ***Challenger Lifts Inc.*** or with parts meeting ***Challenger Lifts Inc.*** specifications. Contact your local Challenger Lifts Parts Distributor for pricing and availability.

(Call Challenger Lifts Inc. (502) 625-0700 for the Parts Distributor in your area)

PARTS BREAKDOWN (continued)

Fig B. Cables

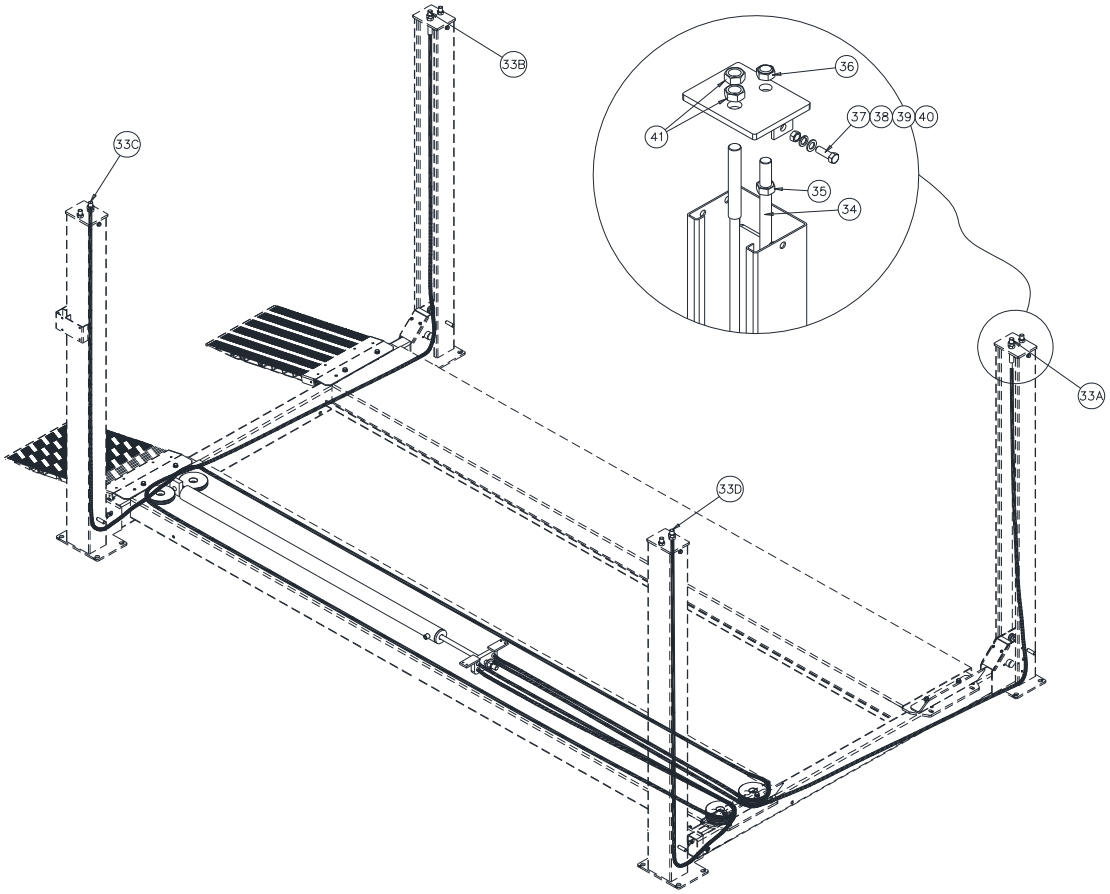

ITEM #	PART #	QTY/LIFT	DESCRIPTION	
33A	TCS3-5-11-02	1	DRIVER SIDE FRONT CABLE Cable #2	161- 7/8”
33B	TCS3-5-11-04	1	DRIVER SIDE REAR CABLE Cable #4	324-5/8”
33C	TCS3-5-11-03	1	PASSENGER SIDE REAR CABLE Cable #3	266-3/8”
33D	TCS3-5-11-01	1	PASSENGER SIDE FRONT CABLE Cable #1	103-1/8”
34	TCS3-5-01-03-00	4	LOCK LADDER	
35	MR6-005	4	M20 NUT	
36	Q4P09-004	4	M20 LOCK NUT	
37	VS10-40-17	8	M12 x 35mm Lg. HEX FLG. HD. CAP SCREW	
38	X10-038	8	M12 WASHER	
39	X10-039	8	M12 LOCK WASHER	
40	X10-040	8	M12 NUT	
41		8	M18 NUT	

Replace all worn, damaged, or broken parts with parts approved by ***Challenger Lifts Inc.*** or with parts meeting ***Challenger Lifts Inc.*** specifications. Contact your local Challenger Lifts Parts Distributor for pricing and availability.

(Call Challenger Lifts Inc. (502) 625-0700 for the Parts Distributor in your area)

PARTS BREAKDOWN (continued)

Fig C. Runway Sheaves

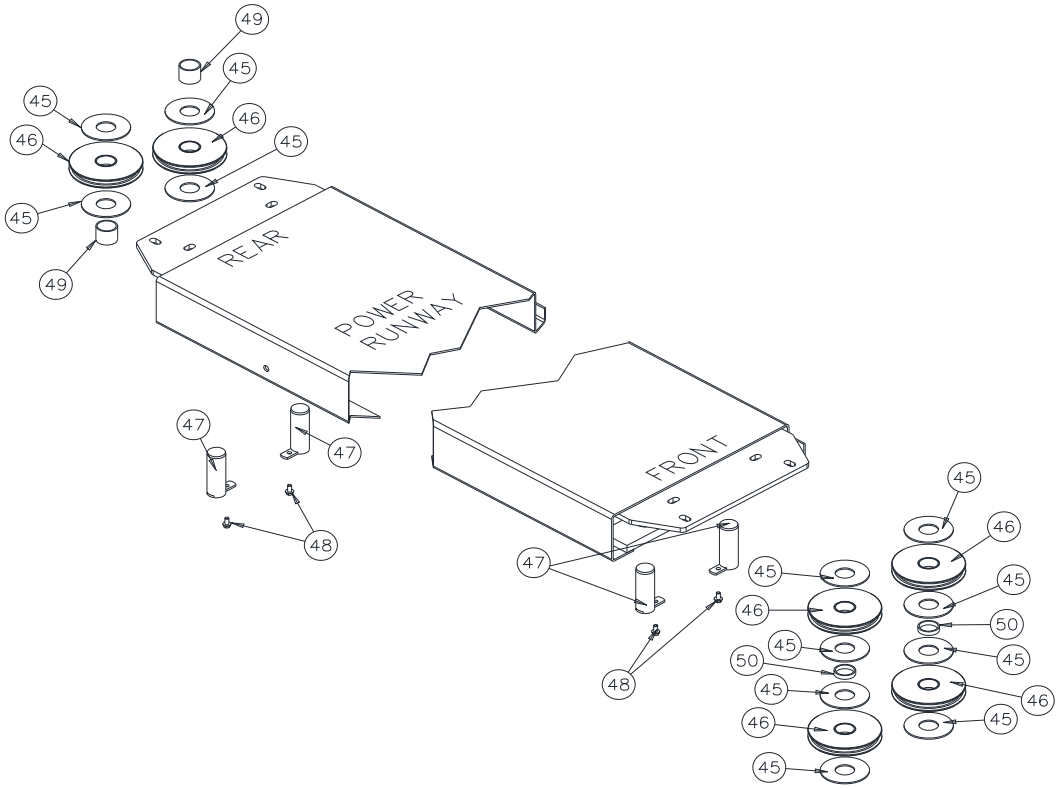

ITEM #	PART #	QTY/LIFT	DESCRIPTION
45	TCS3-5-04-06	12	1/8” THICK BEARING
46	TCS3-5-04-03-00	6	SHEAVE ASSEMBLY
47	TCS3-5-07-04-00	4	SHEAVE PIN ASSEMBLY (RUNWAY)
48	B31188	4	M8 x 16mm Lg. HEX LOCKING FLG. HD. CAP SCREW
49	TCS3-5-07-03	2	RUNWAY SHEAVE SPACER – TALL
50	TCS3-5-07-02	2	RUNWAY SHEAVE SPACER - SHORT

Replace all worn, damaged, or broken parts with parts approved by ***Challenger Lifts Inc.*** or with parts meeting ***Challenger Lifts Inc.*** specifications. Contact your local Challenger Lifts Parts Distributor for pricing and availability.

(Call Challenger Lifts Inc. (502) 625-0700 for the Parts Distributor in your area)

PARTS BREAKDOWN (continued)

Fig D. Cross Beams

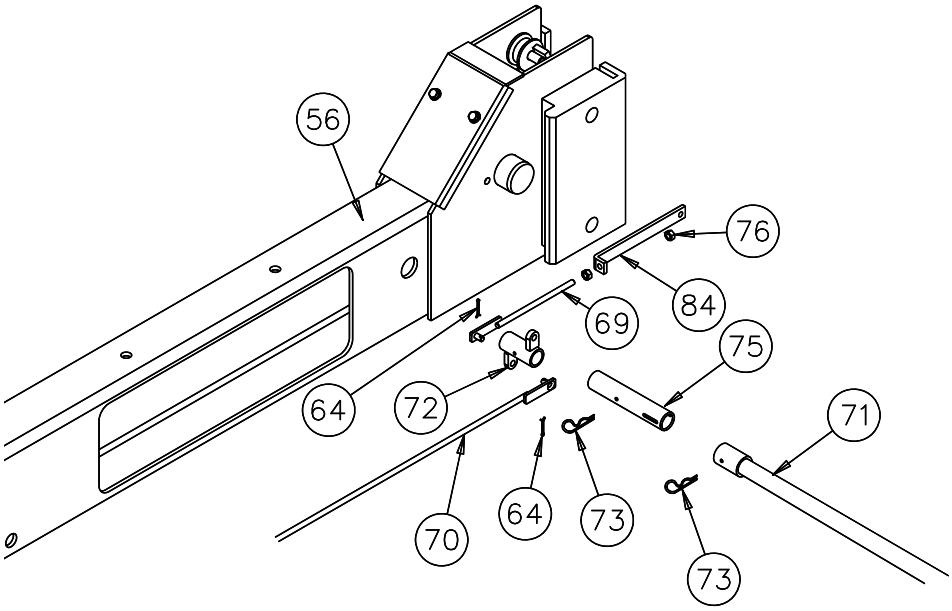

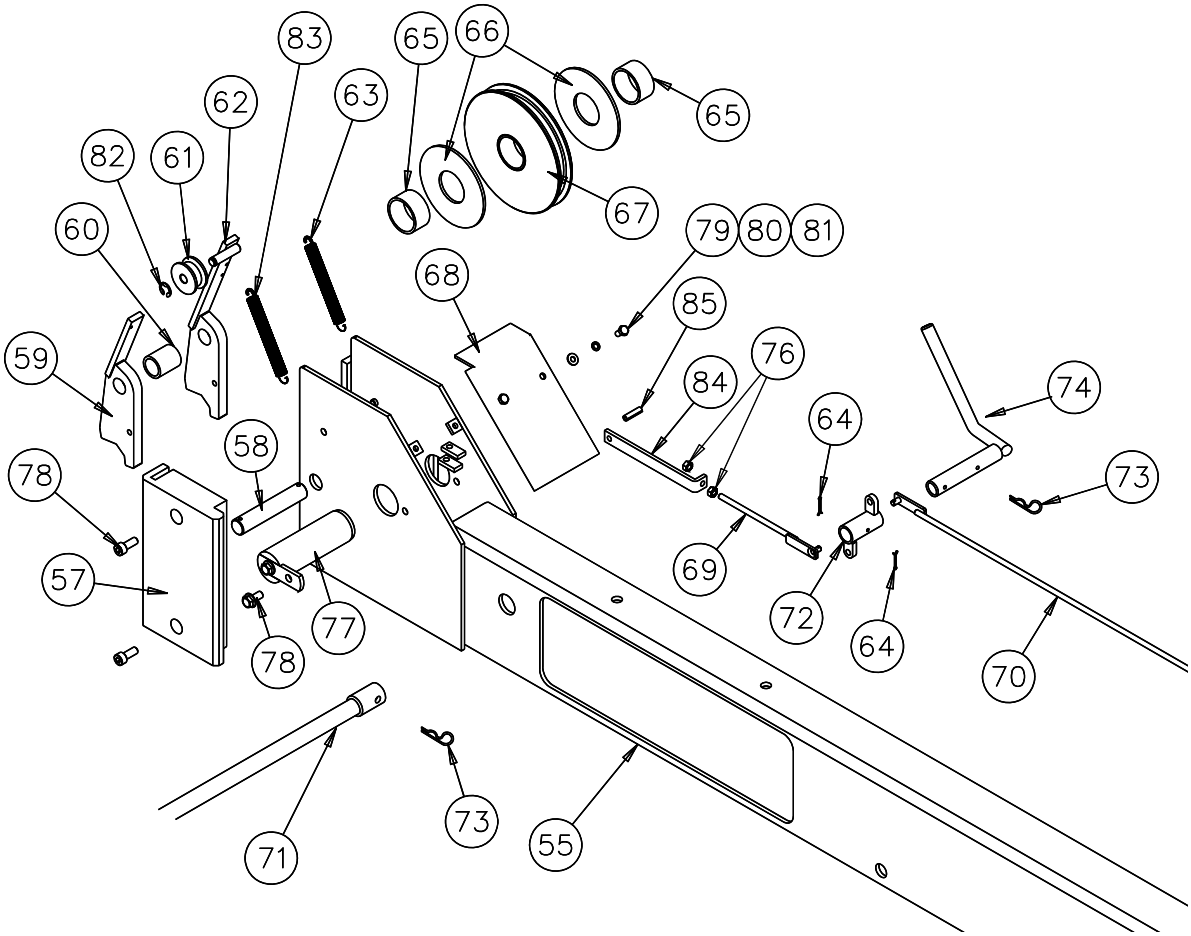

ITEM #	PART #	QTY/LIFT	DESCRIPTION
55	TCS3-5-04-01-00	1	CROSSBEAM WELD WITH HANDLE
56	TCS3-5-05-01-00	1	CROSSBEAM WELD WITHOUT HANDLE
57	TCS3-5-04-02	8	SLIDE BLOCK
58	TCS3-5-04-15	4	LOCK PIVOT PIN
59	TCS3-5-04-11-00	4	PRIMARY LOCK PAWL
60	TCS3-5-04-12	4	SPACER BUSHING
61	JSZ5-5-02-05	4	ROLLER
62	B40134	4	SLACK CABLE LATCH
63	JSZ5-5-02-09	4	SLACK LATCH EXTENSION SPRING
64	TCS3.5-20	4	COTTER PIN, Ø2mm X 10mm Lg.
65	TCS3-5-04-16	8	SHEAVE SPACER BUSHING
66	TCS3-5-04-06	8	1/8” THICK BEARING
67	TCS3-5-04-03-00	4	SHEAVE ASSEMBLY
68	TCS3-5-04-14	4	SHEAVE GUARD
69	TCS3-5-04-08-00	2	MECHANICAL LOCK ROD- SHORT
70	TCS3-5-04-09-00	2	MECHANICAL LOCK ROD – LONG
71	TCS3-5-10-00A	1	LOCK ROD BAR
72	TCS3-5-04-10-00	2	MECHANICAL LOCK COUPLER
73	GJY12-3	1	HAIRPIN COTTER PIN
74	TCS3-5040400A	1	MECHANICAL LOCK RELEASE HANDLE
75	TCS3-5-05-04	1	LOCK COUPLER PIVOT PIN
76	B40467	8	NUT, M6
77	TCS3-5-04-07-00	4	SHEAVE PIN ASSEMBLY (CROSSBEAM)
78	Q4P09-006	20	M8 x 20mm Lg. HEX LOCKING FLG. HD. CAP SCREW
79	Q4P09-007	8	M6 X 12mm Lg CAP SCREW
80		8	M6 LOCK WASHER
81	X10-032	8	M8 x 20mm Lg. SOCKET HEAD CAP SCREW
82	Q4P09-008	4	Ø10mm SNAP RING
83	TCS4-04-13	4	PRIMARY LOCK EXTENSION SPRING
84	TCS3-5-04-05	4	LOCK PAWL CONNECTION
85	CLTCS3-5-21	4	ROLL PIN, Ø6mm X 24mm Lg.

Replace all worn, damaged, or broken parts with parts approved by ***Challenger Lifts Inc.*** or with parts meeting ***Challenger Lifts Inc.*** specifications. Contact your local Challenger Lifts Parts Distributor for pricing and availability.

(Call Challenger Lifts Inc. (502) 625-0700 for the Parts Distributor in your area)

REVISIONS

2020/08/10 – UPDATED THE 115V POWER UNIT PART NUMBER.
2020/12/15 – CHANGED POWER UNIT FORM 31368-19 TO AB-9367-DLH. UPDATED WIRING DIAGRAM AND PARTS BREAKDOWN.
2023/12/01 – UPDATED ANSI/ALI REFERENCE MATERIAL. UPDATED ANCHORING REFERENCE MATERIAL.
2024/03/21 – ADDED ANSI STANDARDS REFERENCE STATEMENT SECTION. PG. 5.
2024/10/01 – UPDATED ANSI/ALI STATEMENT.
2024/11/04 – UPDATED WARNING LABLE LOCATION ON POWER COLUMN.
2024/12/09 – UPADTED NOTICE PICTOGRAM
2025/06/27 – UPDATED PARTS NUMBERS.
2026/06/10 – CLARIFIED DIAGONAL DIMENSIONS FOR LIFT LAYOUT.