INSTALLATION, OPERATION & MAINTENANCE MANUAL

Heavy Duty Four Post Lift

MODEL 44060

Standard and Extended

60,000 lbs Capacity

2311 South Park Rd Louisville, Kentucky 40219
Email: Challengerlifts@soe.freshdesk.com Phone: 800-648-5438

IMPORTANT: ***READ THIS MANUAL COMPLETELY BEFORE INSTALLING or OPERATING LIFT***

Rev. 2026/10/13

TABLE OF CONTENTS

Important Information	3
Cautions and Warnings	3
Tools Required	4
Anchoring Tips	5
Installation Instructions	6
30 Day Maintenance	8
Trouble Shooting Guide	9
Parts & Shipping List	10
Parts Breakdown and Installation Drawings	14

IMPORTANT INFORMATION

1. The floor where the lift is to be installed must be a minimum of 5” thickness of concrete. Concrete must be reinforced with steel rebar with a minimum compressive strength of 3,000 psi. Failure by the purchaser to provide the recommended mounting surfaces could result in personal injury, property damage and/or unsatisfactory lift performance.

2. Read the installation manual before installing the lift.

3. The four different size lifts referenced in this manual are sized according to the Track lengths inside the Cross Rails. The different lifts are as follows:

   - MDL 44060 has a track length of 25’.
   - MDL 44060E has a track length of 30’.
   - MDL 44060X has a track length of 35’.

4. This lift is a four-post lift which requires a minimum (44060) 26’-1” x 42’-4” (44060E) 26’-1” x 47’-4” or (44060X) 26’-1” x 52’-4” bay area.

5. Read anchoring tips information before drilling and installing the anchor bolts.

6. Do not raise a vehicle with the lift until the lift has been correctly installed and adjusted as described in this manual.

7. Maximum floor variation between any two posts is 2 inches.

8. Power unit: 15 hp, 230V 3PH, 50/60hz.

CAUTIONS AND WARNINGS

MOTORS AND ELECTRIC CONTROLS ARE NOT SEALED
AGAINST WEATHER OR MOISTURE. DAMAGE OR ELECTRICAL SHOCK MAY OCCUR IF INSTALLED UNPROTECTED OUTDOORS.

FACTORY MUST BE NOTIFIED WITHIN 30 DAYS OF DELIVERY
IF THERE ARE ANY PARTS MISSING.

RECOMMENDED OIL: HYDRUALIC MEDIUM OIL AW-32 OR EQUIVALENT.

TOOLS REQUIRED

Concrete rotary hammer drill with ¾” carbide bit

Open End Wrenches: 7/16”, 1/2”, 9/16”, 3/4”, 15/16”, 1 1/8”, 1 11/16” & 1 7/8”

Ratchet Driver

Sockets: ¼”, 1/2”, 3/4”, 15/16”, 1 1/8”, 1 11/16” Deep Socket X 1/2”

Allen Wrenches: 3/16”, 1/4” & 5/16”

8” and 15” Crescent Wrench

Phillip and Slotted Screwdriver

Hammer

Needle Nose Pliers

Retainer Ring Pliers

Electrical Pliers

Level

50’ Tape Measure

Chalk Line

Small Drift Punch

30” Pry Bar

Nylon Lifting Sling

Step Ladder

21 gallons of hydraulic medium oil AW-32 or equivalent

¼” Pneumatic Hose

4 x 4 Wood Blocks

#19 Steel Drill (0.166 Dia.)

Forklift

ANCHORING TIPS

1. Anchor must be at least 5” from the edge of the slab or any seam.
2. Use a concrete hammer drill with a 3/4” carbide bit.
3. Do not use a worn bit.
4. Drill in a perpendicular line with the hole.
5. Do not apply excessive pressure to the drill. Let the drill do the work.
6. Lift the drill up and down occasionally to remove residue and to reduce binding.
7. Drill the hole depth equal to the length of the anchor, or completely through the slab.
8. For better holding power, blow all dust and residue from the hole before driving anchor into hole.

Place a flat washer over threaded end of anchor. Spin nut 1/2” down past end of anchor. Carefully tap anchor into the concrete until nut and flat washer are against base plate. Do not use an impact wrench to tighten.

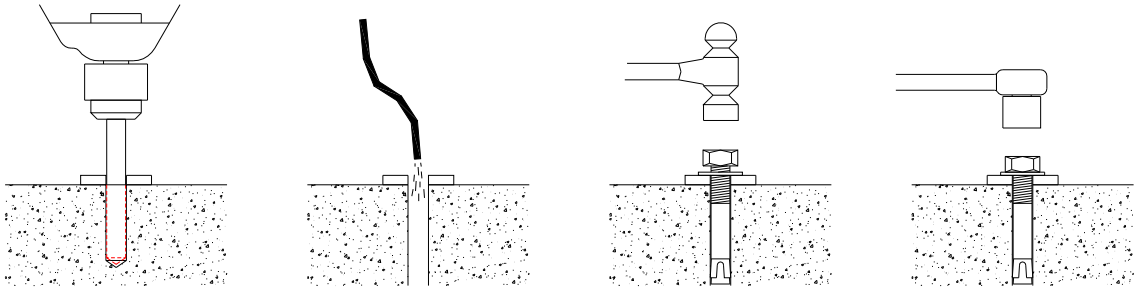

FIG. #1 FIG. #2 FIG. #3 FIG. #4

INSTALLATION INSTRUCTIONS

1. Determine the location for the lift. Keep in mind overhead clearances. Sixteen feet is the minimum recommended ceiling height. A higher ceiling may be required depending on the height of the vehicles. Standard dimension required for four post lift is a minimum (44060) 26'-1" x 42'-4", (44060E) 26'-1" x 47'-4" or (44060X) 26'-1" x 52'-4" bay area.

2. Unpacking lift, inspect lift for any damages due to transportation and check shipping list for missing parts.

3. Determine which side of the lift the Control Console is to be installed. This is called the MAINSIDE. The other side is referred to as the OFFSIDE. Ease of entry and exit from vehicles, type of work being done and required placement of the console to the lift are all considerations.

4. Step #1 Using the chalk line layout a rectangle where the leg assemblies will be located (44060) 17'-1 1/4" x 28'-5 3/4", (44060E) 17'-1 1/4" x 33'-5 3/4" or (44060X) 17'-1 1/4" x 38'-5 3/4" bay area (see Layout & Installation Specification sheet). This should give the lift 4" clearance in front of the ramps and 7'-6 1/4" from the side of the any leg.

5. Step #2 After determining the Mainside, stand the two Mainside Legs upright inside the chalk lines, with each leg facing inside. The two legs come with two holes in the bottom of the legs they should be facing the Control Console. (See Fig. #1 Layout Drawing and Fig. #2.) Next level and anchor the Mainside Legs per the anchor tips shown above.

6. Step #3 Unpack the inside of the leg by removing the wood blocks and chain straps. Next run the hydraulic hose and ¼ airline tube thru the two holes with rubber grommets in the legs. Do both legs the same way.

7. Step #4 Locate the LH and RH Cross Rails. Position the Cross Rail about 12" to 18" from the Mainside Leg as shown in Fig. #2 and Fig. #10. Mainside end of the Cross Rail in front of the Mainside Leg. Set each Cross Rail on two 4 x 4 blocks of wood. Next connect the Cross Rail chains to the chain connector located at the base of the Mainside Leg. There are two 2 ½" long dowel pins and one 3" long dowel pin inside the chain connector held in place by dowel pin holders (See Fig. #2 & Fig. #13). Remove the holders and slide the pins out. Connect the center chain first using the 3" dowel pin then the outer chains using the 2 ½" dowel pins. Then bolt the RH/LH dowel pin holders on the connector. Repeat procedure the other Mainside Leg.

8. Step #5 Slide the Cross Rail towards the Mainside Leg (See Fig. #3 & Fig. #10B). The Cross Rail tube should be flush with the front part of the latch bar on the leg weldment. Next connect the cylinder chain to the Cross Rail chain connector. There should be two 4" long dowel pins in Cross Rail chain connector. Remove the holders and slide the pins out. First connect the outside chain then the center chain. Then bolt the RH/LH dowel pin holders on the connector to secure the dowel pins. Repeat procedure the other Mainside Leg.

9. Step #6 Move the Offside Legs in front of the Offside end of the Cross Rail (See Fig. #4, Fig. #10A). The end of the Cross Rail should be flush with the base plate of the leg weldment. Next **remove one at a time** the safety latch pin keepers and replace it with the safety rods. Next slide the Offside Leg into position. Look at your chalk line layout. Once the leg is in position, pull the two safety rods through the two holes. The rods should stick out about 2" past the top plate (See Fig. #12). Screw and tighten the 1 ¼" Lock Washer and 1 ¼-7UNC Hex Nut. Repeat procedure the other Offside Leg. Note the rectangular tube of the Cross Rail should be flush with the edge of the latch bar welded on the Offside Leg.

10. Step #7 Locate the six round threaded chain connectors, 3/8" shoulder bolt and 5/16-18UNC Nylon Hex Nut (See Fig. # 5 & Fig. #12). Attach the chain connector to the chain and pull each through the three holes on the top plate. Use vice grip pliers to hold the bottom of the chain connector in place and a deep 1 11/16" **deep socket** to tighten the jam nut. There should be about 1 ½" worth of threads past the first jam nut. May have to adjust the chain connector depending on how level the lift is from side to side with weight on the lift. Repeat procedure the other Offside Leg.

11. Step #8 Level and anchor both Offside Legs. Anchor the Offside per the anchor tips shown above.

12. Step #9 Locate and attach the rub block bracket as shown in Fig. #6. The rub block brackets are also shown in Fig. #10, #10A & #10B. Raise Cross Rail about 24", this makes it easier to attach the brackets to Cross Rails. Mainside Leg uses the Single Rub Block Bracket. The Offside Leg uses the Double Rub Block Bracket. Slide the brackets in from the bottom and attach them using the 5/8 bolts, 5/8 lock washers and the 5/8 flat washers.

13. Step #10 Locate and position the two Tracks in between the Cross Rail (See Fig. #1, Fig. #7 & Fig. #11). Both jack rails on each Track should be facing each other. The Track should be centered on the Cross Rail and should have a spacing of 3'-0" to 4'-10" depending on the customer's preference.

14. Step #11 Locate and position the two Ramps at the end of the Tracks (See Fig. #1, Fig. #7 & Fig. #11). The Ramps can be placed on either end. The spacing between the end of the Track plate and the Ramp should be about 3/8". Next anchor Ramps using the ½ anchor bolts.

15. Step #12 Locate and position the two Stops at the end of the Tracks (See Fig. #1, Fig. #7 & Fig. #11). The Stops can also be placed on either end of the Tracks unless Ramps are already anchored. Use ¾ bolts, ¾ flat washers, ¾ lock washers and ¾ nuts to bolts Stops to the end plates of the Tracks.

16. Step #13 Locate and position the Control Console centered between the two Mainside Legs and a minimum of 2'-0" from the outside of the base plate (See Fig. #1). Remove Top Console cover and attach hydraulic hoses and pneumatic tube as shown in Fig.# 9.

17. Step #14 Next attach the 5/32" diameter coiled tube on the top tube connector in each Mainside Leg to the pneumatic cylinders on the Cross Rails.

18. Step #15 Locate and position the hydraulic hose protectors as shown in Fig. #6. Anchor protectors per anchor tips. Use 3/8 anchor bolts to secure hose protectors.

19. Step #16 Fill the power unit tank with AW-32 or equivalent hydraulic oil. The reservoir has a 20-gallon capacity.

20. Step #17 Wire motor starter and motor (See power unit manual for installation).

21. Step #18 Raise lift and level Cross Rails side to side by adjusting the Threaded Chain Connector on the Offside Legs. Cross Rails may have to re-adjust chain when load is on the lift.

22. Step #19 Purge trapped air in hydraulic lines by raising and lowering lift repeatedly. Refill tank with hydraulic oil and lift is ready to operate.

30 DAY MAINTENANCE

1) Check all bolts and nuts to make sure they are tight.

2) Check equalizer chains regularly for proper tension and adjustment.

3) Inspect adapters and pads for damage or wear. Replace if necessary.

4) Inspect all hydraulic lines and fittings for leaks and tighten if necessary.

5) Check locking latches and releases for proper operation.

6) During first week check and tighten anchor bolts daily and check concrete for stress cracks.

7) Adjust chains so locks engage simultaneously while raising, this will vary with load.

TROUBLE SHOOTING GUIDE

POSSIBLE PROBLEM	POSSIBLE CAUSE & SOLUTIONS
1. MOTOR DOES NOT RUN.	A) Breaker tripped or fuse blown. B) Motor thermal overload tripped. Wait for overload to cool. C) Check thermal overload in starter box. Push to reset. D) Defective control switch, replace. E) Faulty wiring connections. Call electrician.
2. MOTOR RUNS BUT THE LIFT WILL NOT RAISE OR HOLD A LOAD.	A) A foreign object under check valve. Turn P/U on and push lowering handle down. Foreign matter should release under pressure. B) Remove check valve. Clean and replace. C) Oil level low: check oil reservoir. With tracks in the down position, pump reservoir should be full.
3. MOTOR RUNS BUT THE LIFT PICKS UP PARTIAL LOAD ONLY.	A) Relief valve setting is too low Loosen hex nut on pump and adjust valve clockwise. B) Hydraulic seals damaged (call factory for instructions).
4. OIL BLOWS OUT BREATHER.	A) Oil reservoir overfilled. B) Lift lowered too quickly while under heavy load.
5. LIFT MAKES A GROANING SOUNDING WHEN RAISING OR LOWERING.	A) Bleed cylinder manually.
6. LIFT RAISES UNEVENLY.	A) Chains are not properly adjusted or tighten. B) Use lighter weight oil in the pump.

For other possible problems reference Power Unit Owners Manual

PARTS & SHIPPING LIST

PART NUMBER	DESCRIPTION	QTY.	
	Control Console	**1**	
2772-BLK	Rubber Grommet	4	
2404-06-06	3/8MJIC x 3/8MNPT Straight Adapter	2	
2404-08-08	1/2MJIC x 1/2MNPT Straight Adapter	2	
2404-08-12	1/2MJIC x 3/4MNPT Straight Adapter	1	
2405-06-04	3/8MJIC x 1/4FNPT Straight Adapter	2	
2406-12-08	3/4FJIC x 1/2MNPT Straight Adapter	1	
4272731	Hydraulic Pressure Gage	2	
47865K21	1/4NPT Brass Ball Valve	1	
5406-04P	1/4NPT Plug	1	
5485K22	1/4NPT Brass Nipple	1	
60115K39	F/L/R Air System	1	
6410-10-06	5/8MORB x 3/8FORB Straight Reducer	2	
6801-08-12	1/2MJIC x 3/4MORB 90 Deg. Adapter	4	
6803-08-08-12	1/2MJIC x 1/2MJIC x 3/4MORB Tee	1	
6804-06-06-06	3/8MJIC x 3/8MORB x 3/8MJIC Run Tee	2	
6804-06-08-06	3/8MJIC x 1/2MORB x 3/8MJIC Run Tee	1	
90126A030	5/16 SAE Flat Washer	10	
90272A148	#6-32 x ½ Pan Head Phillip Screw	6	
90272A247	#10-24UNC x 1 Pan Head Phillip Screw	9	
90272A546	¼-20UNC x 1 ½ Pan Head Phillip Screw	6	
90480A007	#6-32 Mach. Screw Nut	6	
90480A011	#10-24 Mach. Screw Nut	9	
91102A007	#6 Lock Washer	6	
91102A011	#10 Lock Washer	9	
91102A030	5/16 Lock Washer	10	
91102A031	3/8 Lock Washer	8	
91251A623	3/8-16UNC SHCS x 7/8 Lg.	4	
91309A624	3/8-16UNC HHCS x 1 Lg.	10	
91578A304	½-13UNC x 4 ½ Wedge Anchor w/nut & washer	2	HK
92865A581	5/16-18UNC HHCS x ¾ Lg.	10	
ALIF-440-106-XX	Top Panel Cover	1	
ALIF-440-112-XX	Bottom Panel Cover	1	
ALIF-440-113-XX	Control Panel	1	
ALIF-440-119	#10MORB x #6FORB w/0.188 Orifice	2	
A0-120-T3-J-S	Tandem Center Spool Valve	2	
DA15371-H	15 Hp Power Unit, 20-Gal Capacity	1	
K02	Pneumatic Control Valve	1	
PT24006BK	3/8 O.D. Black Tube	3 Ft.	
P23	50/50 Flow Divider	1	
SPB-4002-B	¼ ID x 1/4MNPT Push-On Branch Tee	1	
SPC-6002	3/8 ID x 1/4MNPT Push-On Straight	2	

Cross Rail Assy. 1/1

6498K43	1 1/16 Cyl. Clevis	4	
6498K72	¾” Pivot Bracket	4	
6498K337-3.00	1 1/16 Air Cylinder x 3.0 Stroke	4	
90126A035	5/8 Flat Washer	16	HK
90126A040	1 ¼ SAE Flat Washer	8	
90126A041	1 3/8 SAE Flat Washer	12	
91102A029	¼ Lock Washer	4	
91102A035	5/8 Lock Washer	16	HK
92865A537	¼-20UNC HHCS x ½” Lg.	4	
92865A798	5/8-11UNC HHCS x 1 ½ Lg.	16	HK
98381A683	7/16 Dowel Pin x 4” Lg.	4	
98410A139	1 ½ Ext. Retainer Ring	12	
98410A249	1 3/8 Ext. Retainer Ring	4	
ALIF-440-036L/R-X	MS Safety Latch Bar	1/1	
ALIF-440-037L/R-X	OS Safety Latch Bar	1/1	
ALIF-440-038-XX	Safety Latch Bracket	2	
ALIF-440-054-XX	Safety Latch Weldm’t.	4	
ALIF-440-061	MS Cross Rail Pin	2	
ALIF-440-063	Safety Latch Pin	2	
ALIF-440-066	Safety Latch Pin	4	
ALIF-440-067	Chain Anchor Stud	6	PKG
ALIF-440-068	3-Chain Sheave	4	
ALIF-440-069	Safety Latch Plate	2	
ALIF-440-079-XX	Double Rub Block Bracket	4	PKG
ALIF-440-080-XX	Single Rub Block Bracket	4	PKG
ALIF-440-100	Safety Latch Spring, 1.968 OD x 0.225W x 8.00 Comp.	4	
ALIF-440-101	Safety Latch Spring, 0.687 OD x 0.105W x 7.25 Ext.	4	
ALIF-440-102	Cross Rail Chain	6	
ALIF-440-064	MS Chain Connector Pin	2	
ALIF-440-104L/R-X	LH/RH Dowel Pin Holder	4/4	
ALIF-460-026L-XX	LH Cross Rail Weldm’t.	1	
ALIF-460-026R-XX	RH Cross Rail Weldm’t.	1	
ALIF-460-055	CR Chain Connector	2	
CUHC10500ZTAP727E	#10-24 STS x ½” Lg.	16	
GL-09-057	Rub Block	12	
PT23003BK	5/32 O.D. Black Tube	31 Ft.	
SPE-25	5/32 ID Push-On Union Tee	2	
SPL-2501-B	5/32 ID x 1/8MNPT Push-On 90 Deg. Conn.	4	

LH/RH Mainside Leg Assy. 1/1

1U571	3/8NPT Breather Plug	2	
2404-06-08	3/8MJIC x 1/2MNPT Straight Adapter	2	
2772-BLK	Rubber Grommet	10	
28900-504-25	25 GPM Velocity Fuse	2	
5040K34	5/32 OD x 12”/96” Extendable Tube	2	
5406-08P	1/2NPT Plug	2	
91102A029	¼ Lock Washer	8	
91578A502	¾-10UNC x 7 Wedge Anchor w/nut & washer	12	HK
92865A537	¼-20UNC HHCS x ½” Lg.	8	
98381A683	7/16 Dowel Pin x 4” Lg.	4	
98381A634	3/8 Dowel Pin x 2 ½” Lg.	4	
98381A636	3/8 Dowel Pin x 3” Lg.	2	
98410A249	1 3/8 Ext. Retainer Ring	4	
AA8040001	8” Dia. Bore Cylinder	2	
ALIF-440-059	Cylinder Clevis Pin	4	
ALIF-440-075-XX	Cylinder Clevis	2	
ALIF-440-082-XX	Hose Protector Bracket	2	
ALIF-440-104L/R-X	LH/RH Dowel Pin Holder	4/4	
ALIF-460-015L/R-X	LH/RH Main Side Leg Weldm’t.	1/1	
ALIF-460-081	4 3/4” Chain Sheave	12	
ALIF-460-103	Cylinder Chain	6	
CUHC10500ZTAP727E	#10-24 STS x ½” Lg.	4	
PT24004BK	1/4 O.D. Black Tube	56 Ft.	
SPL-2502-B	5/32 ID x 1/4MNPT Push-On 90 Deg. Conn.	2	
SPL-4002-B	1/4 ID x 1/4MNPT Push-On 90 Deg. Conn.	2	

Offside Leg Assy. 2

91102A040	1 ¼ Lock Washer	8	
91259A626	3/8 Shoulder Bolt x 1 1/4 Lg.	6	HK
91578A502	¾-10UNC x 7 Wedge Anchor w/nut & washer	12	HK
94846A558	1 1/8-12UNF Jam Nut Grd. 5	12	HK
95462A559	1 ¼-7UNC Hex Nut Grd. 5	8	
95615A160	5/16-18UNC Nylon Hex Nut Grd. 5	6	HK
ALIF-440-016-XX	Offside Leg Weldm’t.	2	
ALIF-440-067	OS Threaded Chain Connector	6	PKG
ALIF-440-071	Safety Rod	4	

Track, Ramp & Stop Assy. 2/2/2

90126A036	¾ Flat Washer	16	
90473A237	¾-10UNC Hex Nut	8	
91102A036	¾ Lock Washer	8	
91247A847	¾-10UNC x 3 Lg. HHCS Grd. 5	8	
91578A304	½-13UNC x 4 ½ Wedge Anchor w/nut & washer	8	HK
ALIF-440-053-XX	Ramp Weldm't.	2	
ALIF-440-054-XX	Track Stop	2	PKG
ALIF-460-346-XX	S-SHORT-20' Track Weldm't.	2	
ALIF-460-046-XX	SHORT-25' Track Weldm't.	2	
ALIF-460-146-XX	STD.-30' Track Weldm't.	2	
ALIF-460-246-XX	EXT.-35' Track Weldm't.	2	

Misc. Parts

ALIF-440-096-XX	30' Hose Protector Ext. Weldm't.	2	
ALIF-440-097-XX	30' & 35' Hose Protector Weldm't.	2	
ALIF-440-098-XX	25' Hose Protector Weldm't.	2	
ALIF-440-398-XX	20' Hose Protector Weldm't.	2	
91578A202	3/8-16UNC x 3 ½ Wedge Anchor w/nut & washer	14	HK
GL-09-056	1/16" Steel Shims	32	HK
GL-09-112	¼" Steel Shims	16	HK

Optional Parts

WAJ20	20K Air Roller Jack	1	PKG
WAJ25	25K Air Roller Jack	1	PKG

*** Note: All hardware unless specified is grade 2. All hardware is zinc coated unless specified. Parts with PKG at the end are packed on the lift and parts with HK at the end are packaged in a box and put on the lift.

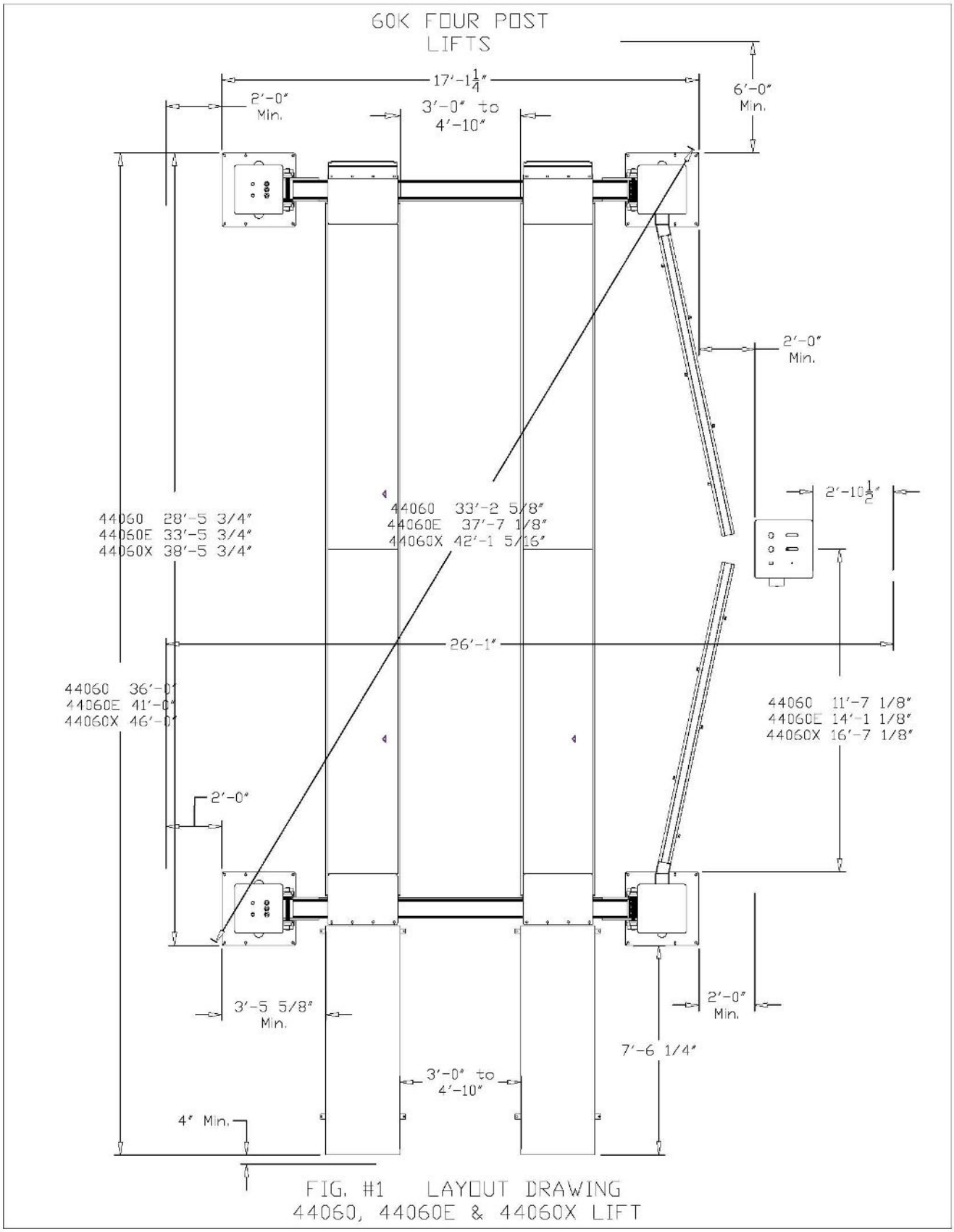

FIG. #1 LAYOUT DRAWING
44060, 44060E & 44060X LIFT

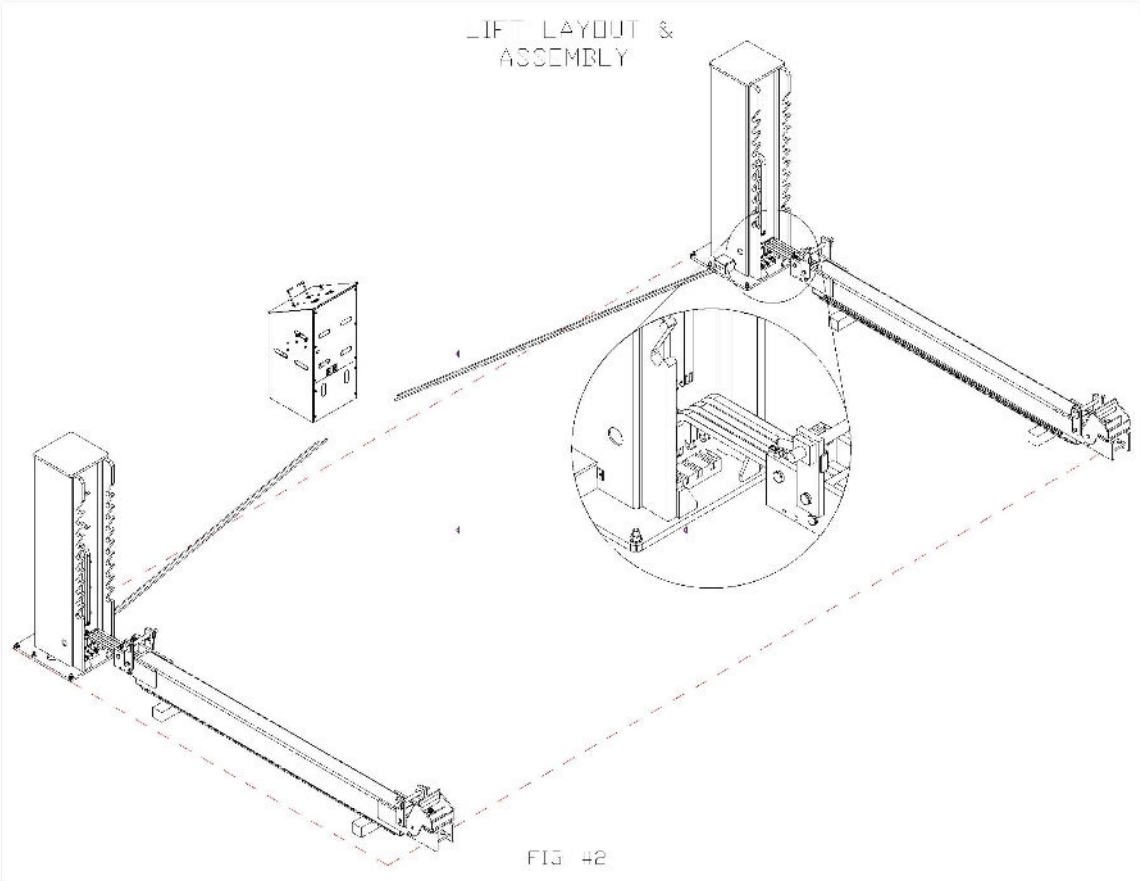
LIFT LAYOUT &
ASSEMBLY
FIG 42

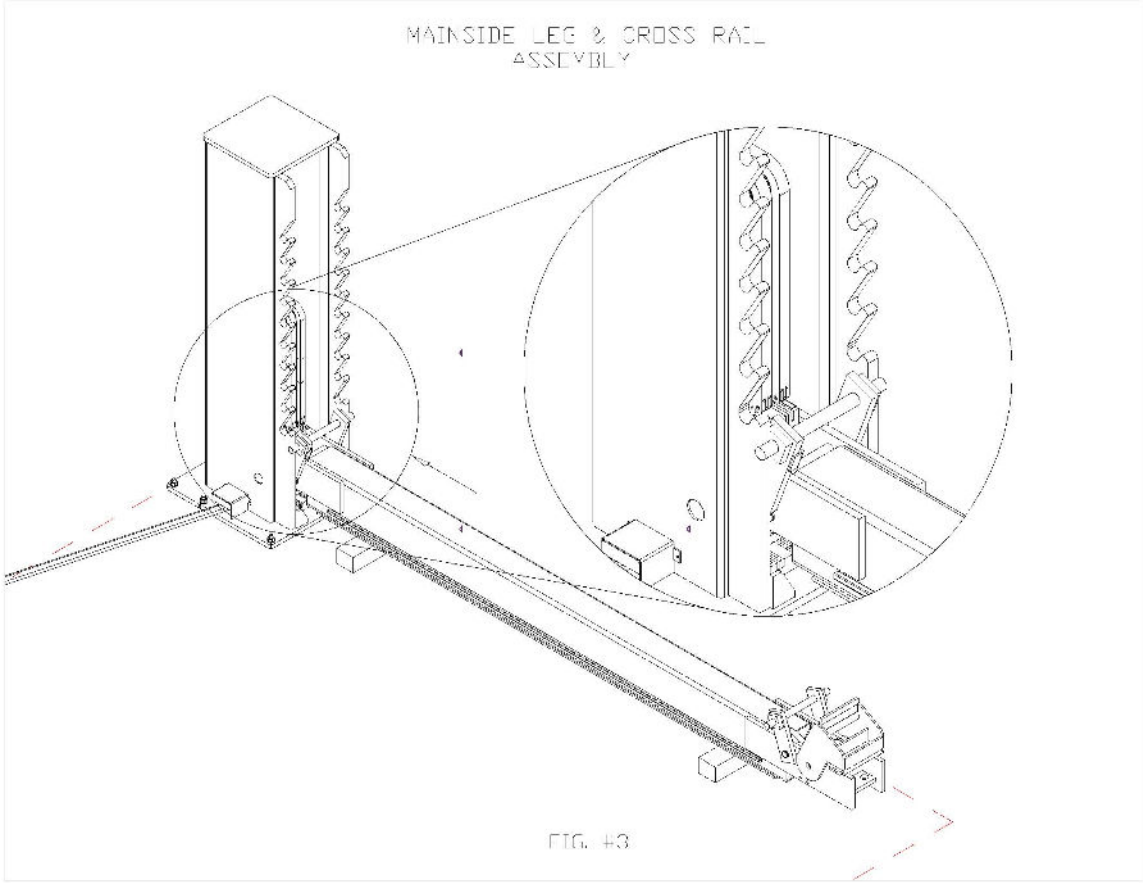
MAINSIDE LEG & CROSS RAIL
ASSEMBLY
FIG. 43

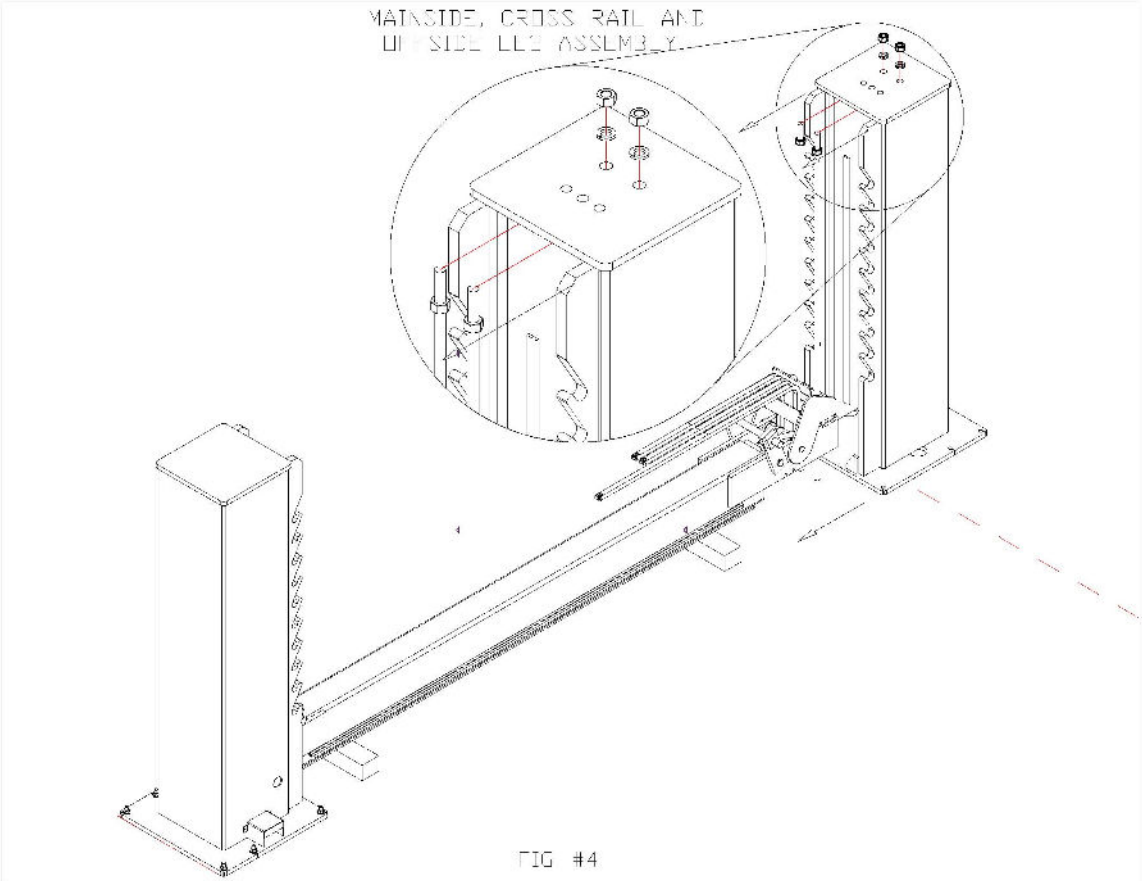
MAINSIDE, CROSS RAIL AND
OUTSIDE LEG ASSEMBLY

FIG #4

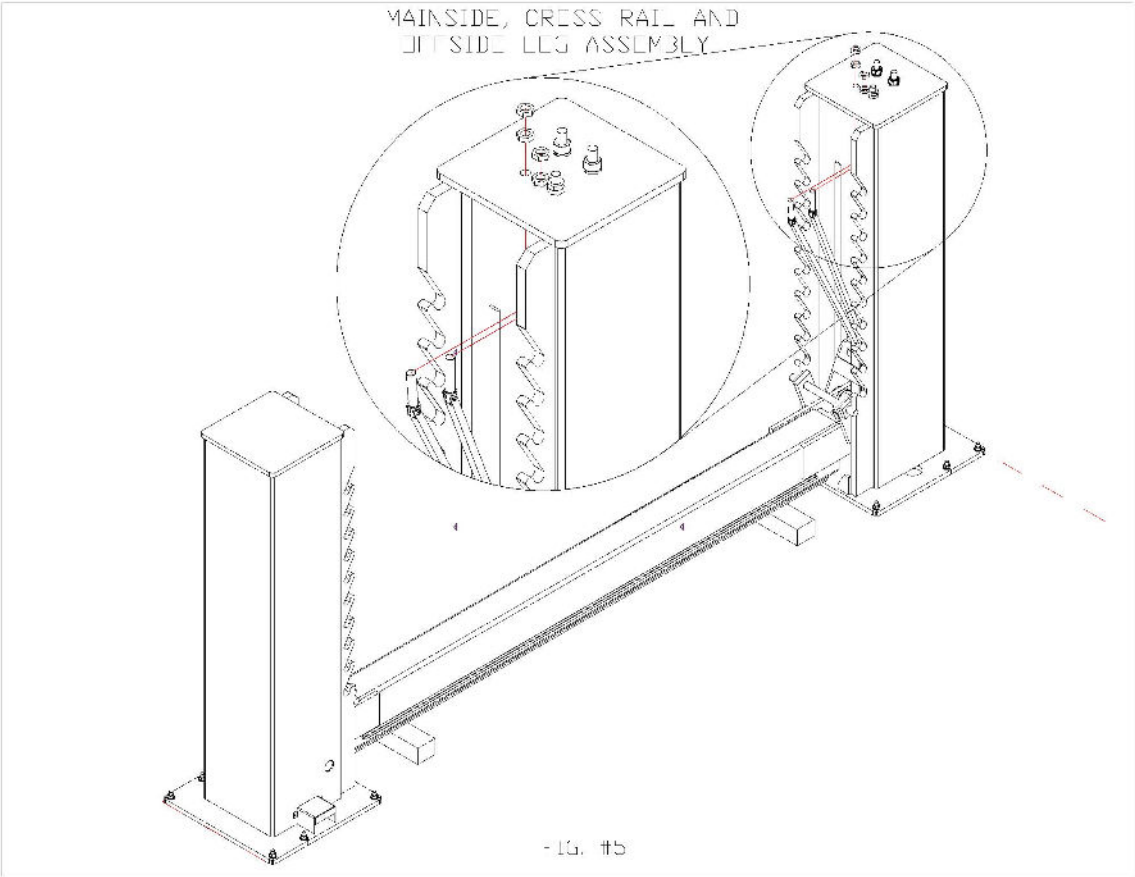
MAINSIDE, CROSS RAIL AND
OUTSIDE LEG ASSEMBLY

FIG #5

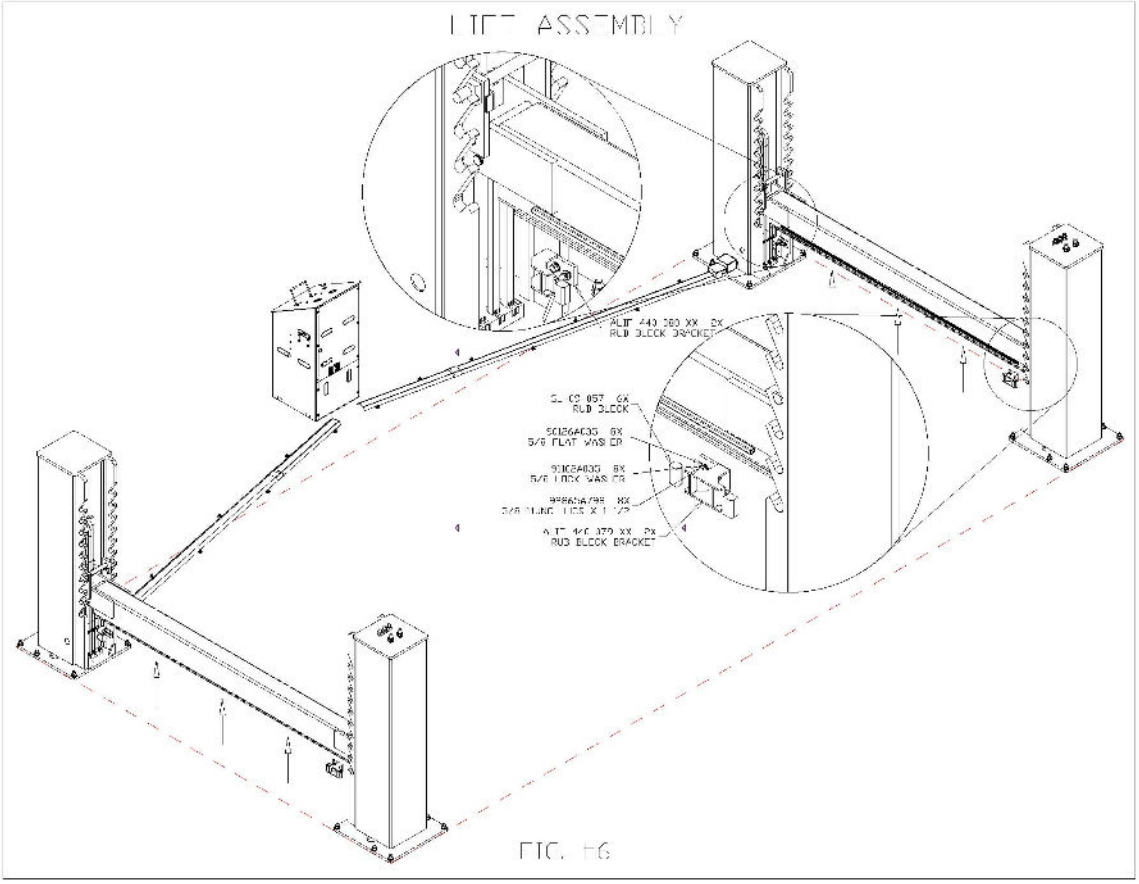
LIFT ASSEMBLY
RUB BLOCK BRACKET
RUB BLOCK
5/8 FLAT WASHER
5/8 LOCK WASHER
RUB BLOCK BRACKET

FIG. #6

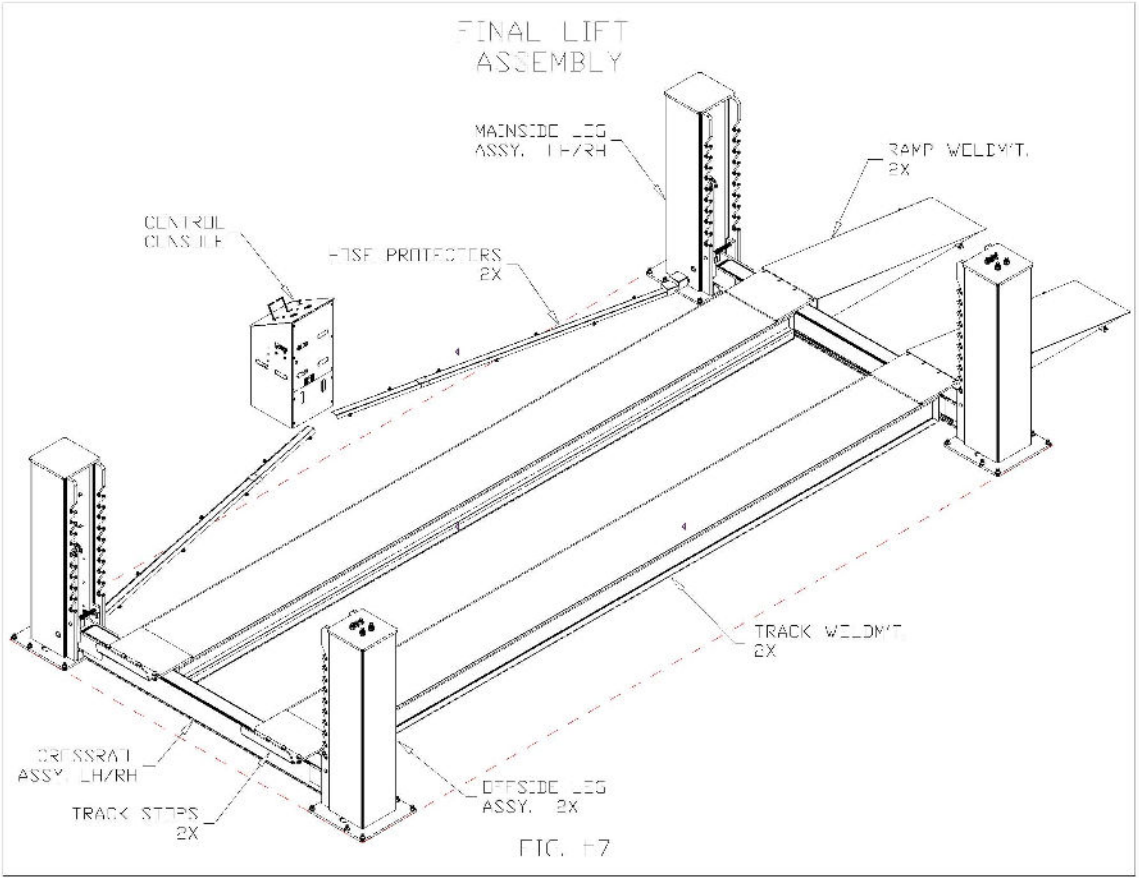
FINAL LIFT
ASSEMBLY
MAINSIDE LEG
ASSY. LH/RH
RAMP WELDMT.
2X
CONTROL
CABINET
FOOT PROTECTORS
2X
TRACK WELDMT
2X
PRESSRAIL
ASSY. LH/RH
TRACK STOPS
2X
OFFSIDE LEG
ASSY. 2X

FIG. #7

CONTROL PANEL
ASSEMBLY

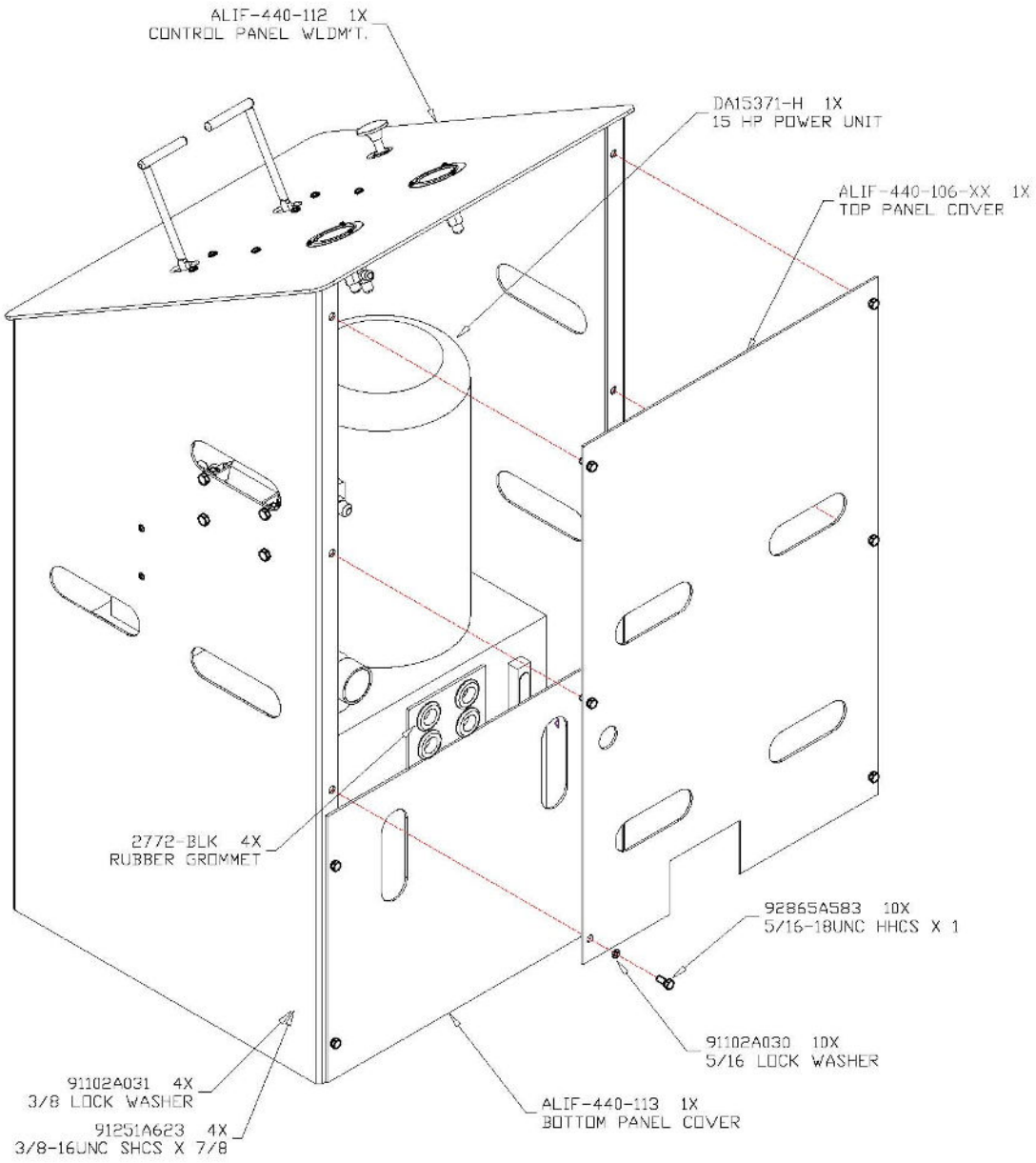

FIG. #8

CONTROL PANEL
AIRLINE & HYDRUALIC
CONNECTIONS

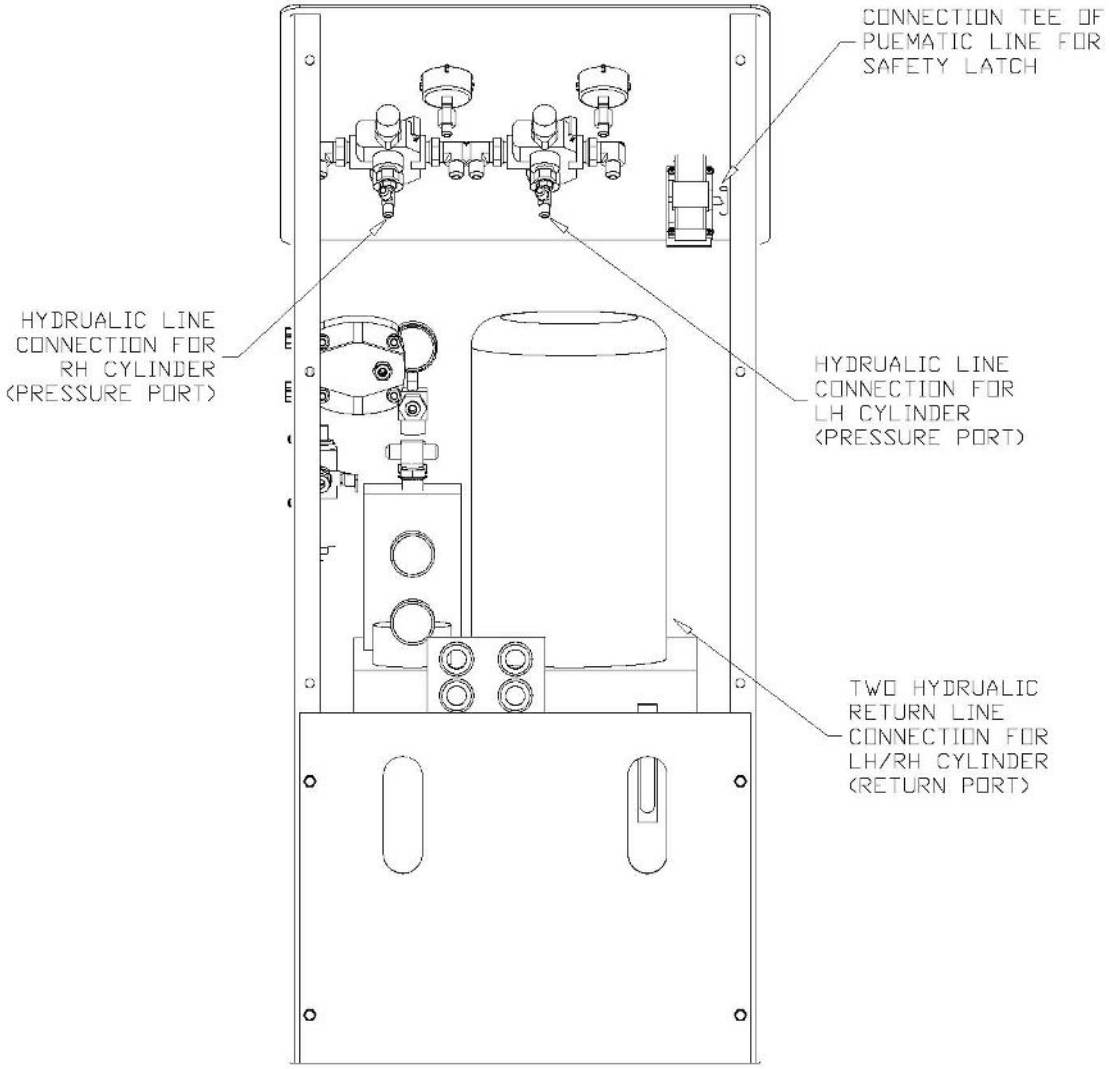

FIG. #9

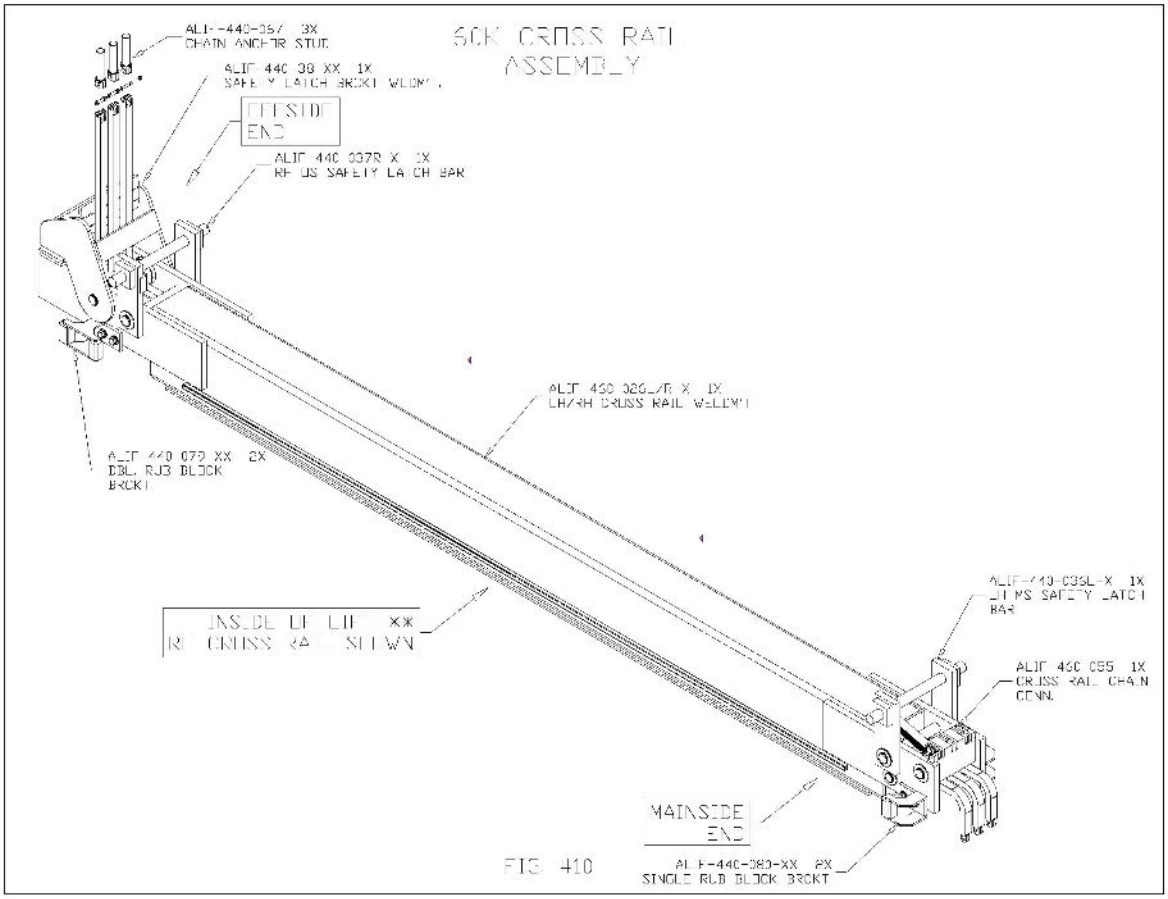

FIG. 410

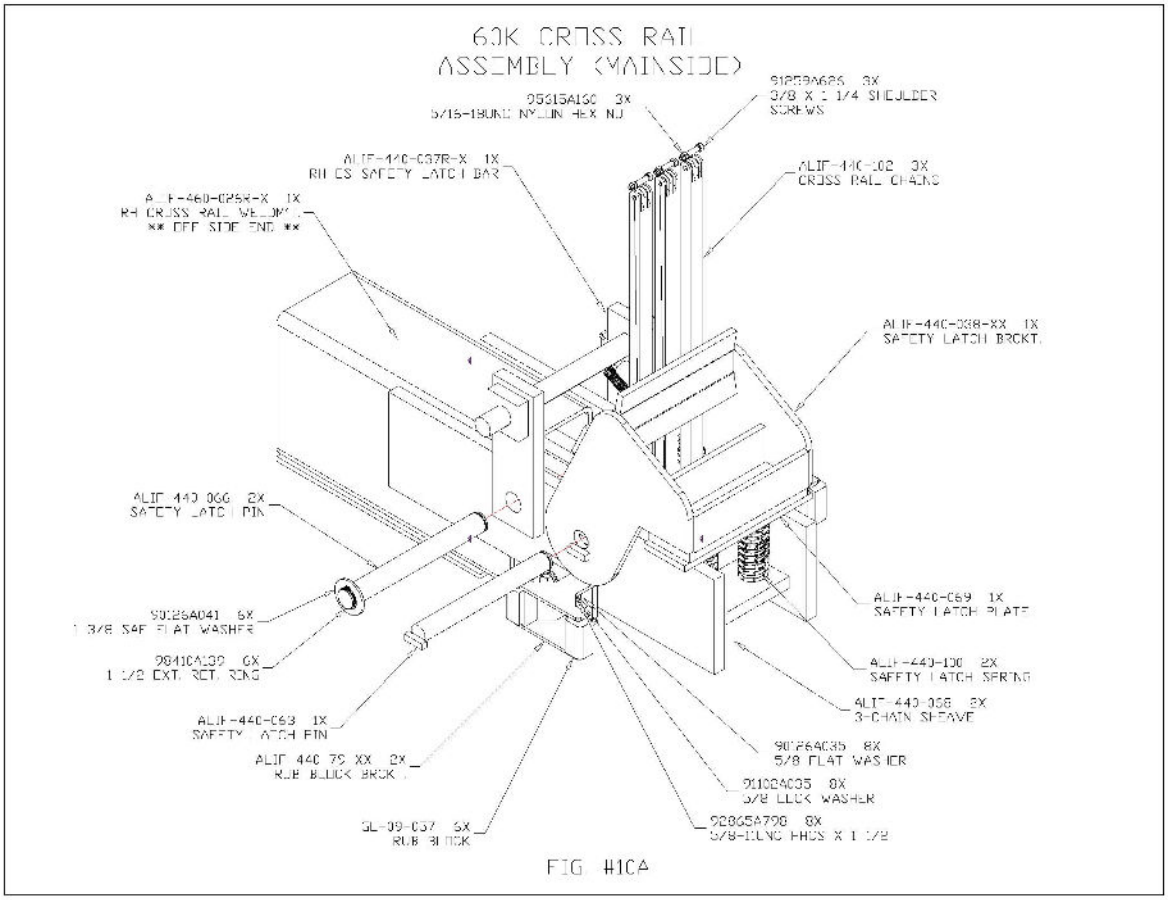

FIG. 410A

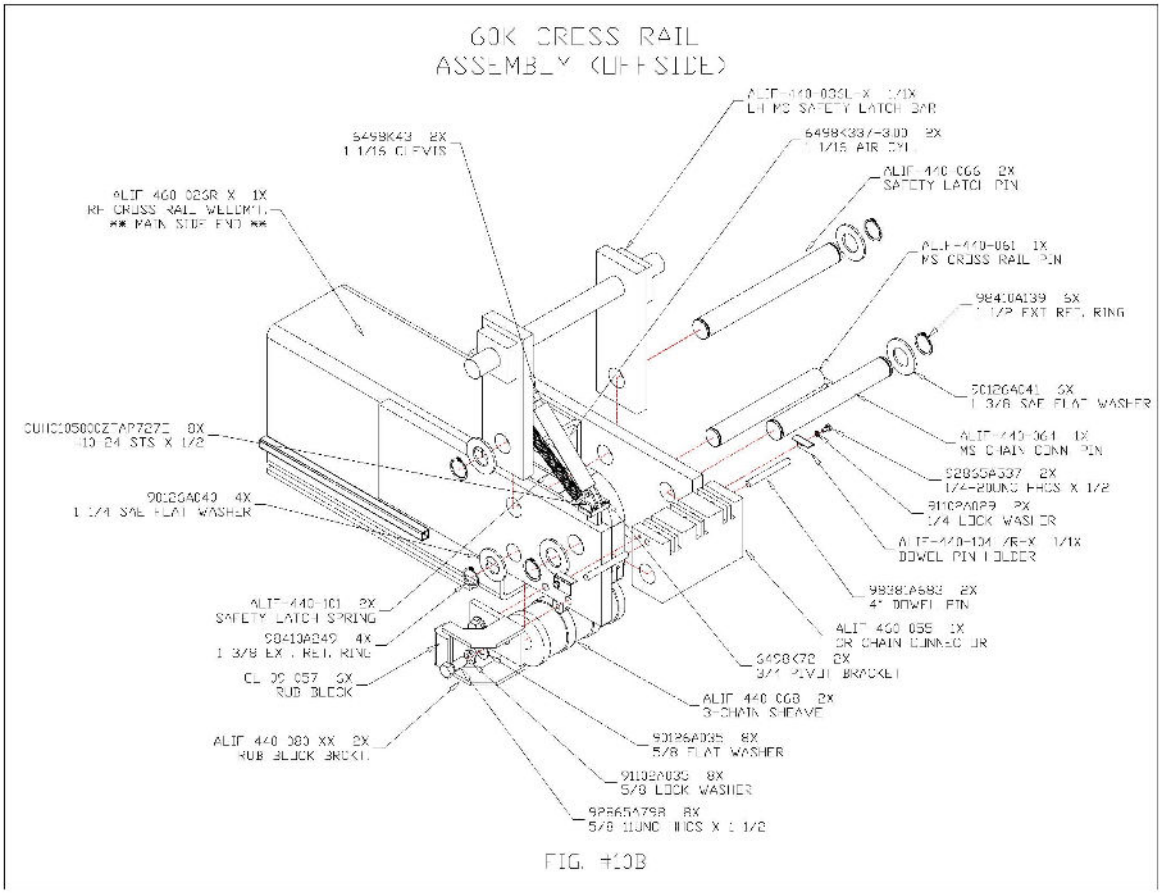

FIG. 40B

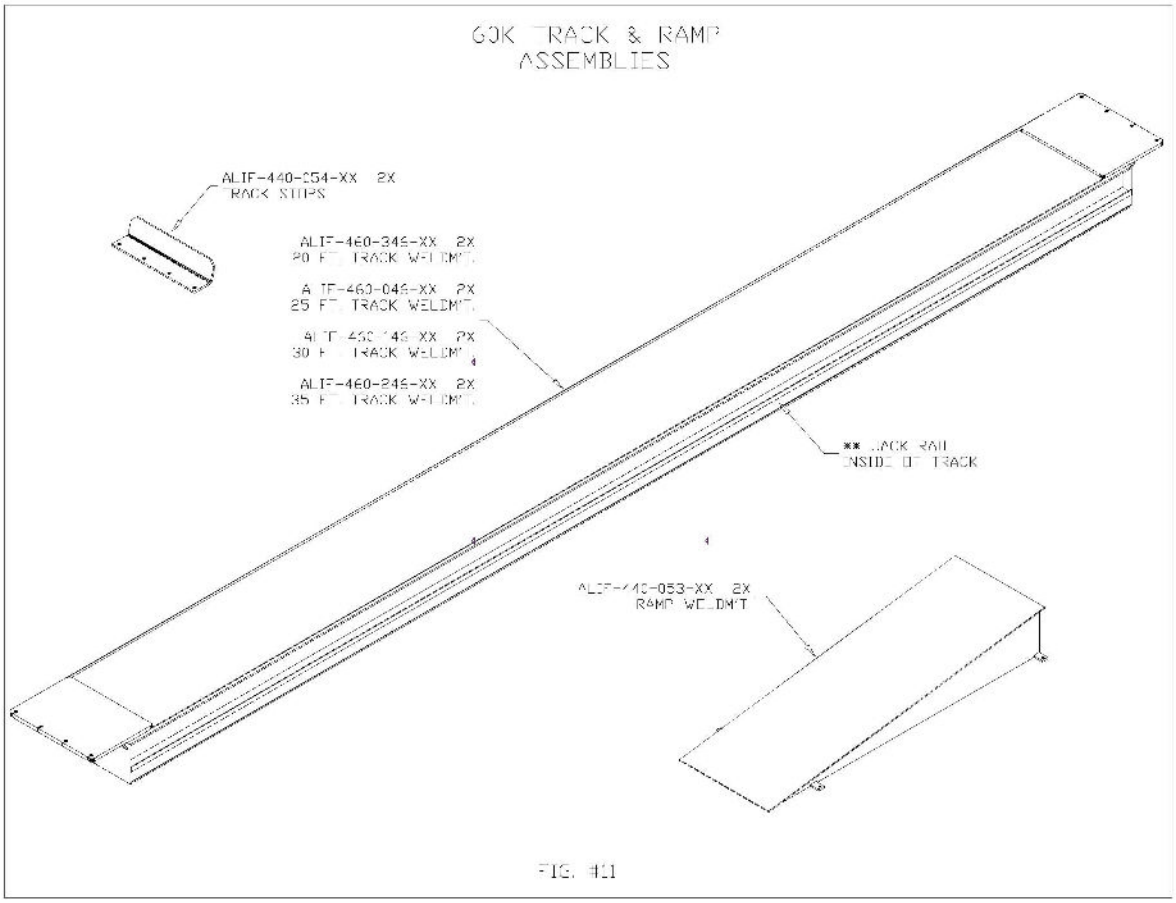

FIG. 41

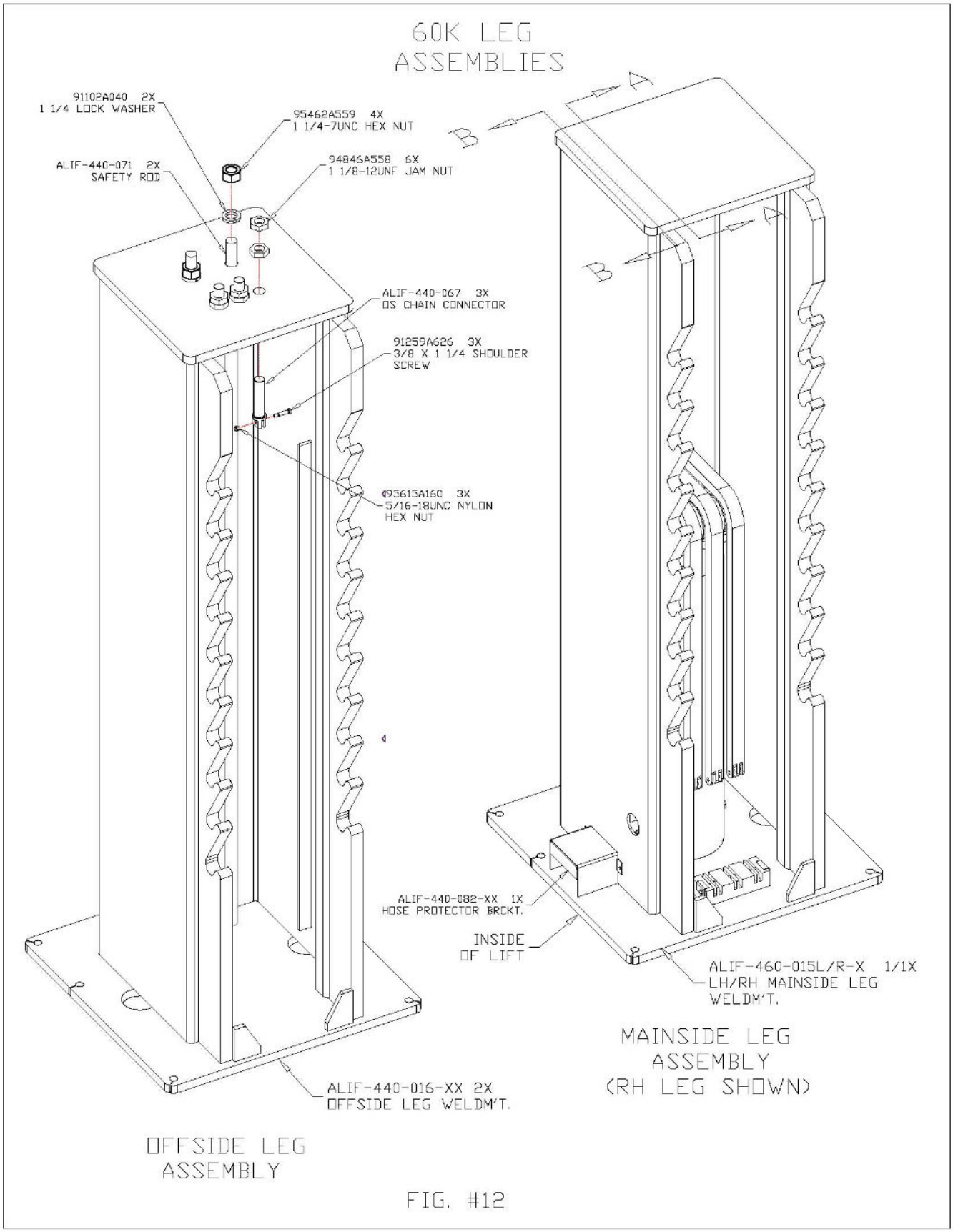
60K LEG
ASSEMBLIES
91102A040 2X
1 1/4 LOCK WASHER
95462A559 4X
1 1/4-7UNC HEX NUT
ALIF-440-071 2X
SAFETY ROD
94846A558 6X
1 1/8-12UNF JAM NUT
ALIF-440-067 3X
OS CHAIN CONNECTOR
91259A626 3X
3/8 X 1 1/4 SHOULDER
SCREW
95615A160 3X
5/16-18UNC NYLON
HEX NUT
ALIF-440-016-XX 2X
OFFSIDE LEG WELDM'T.
OFFSIDE LEG
ASSEMBLY
A
B
A
B
ALIF-440-082-XX 1X
HOSE PROTECTOR BRCKT.
INSIDE
OF LIFT
ALIF-460-015L/R-X 1/1X
LH/RH MAINSIDE LEG
WELDM'T.
MAINSIDE LEG
ASSEMBLY
(RH LEG SHOWN)

FIG. #12

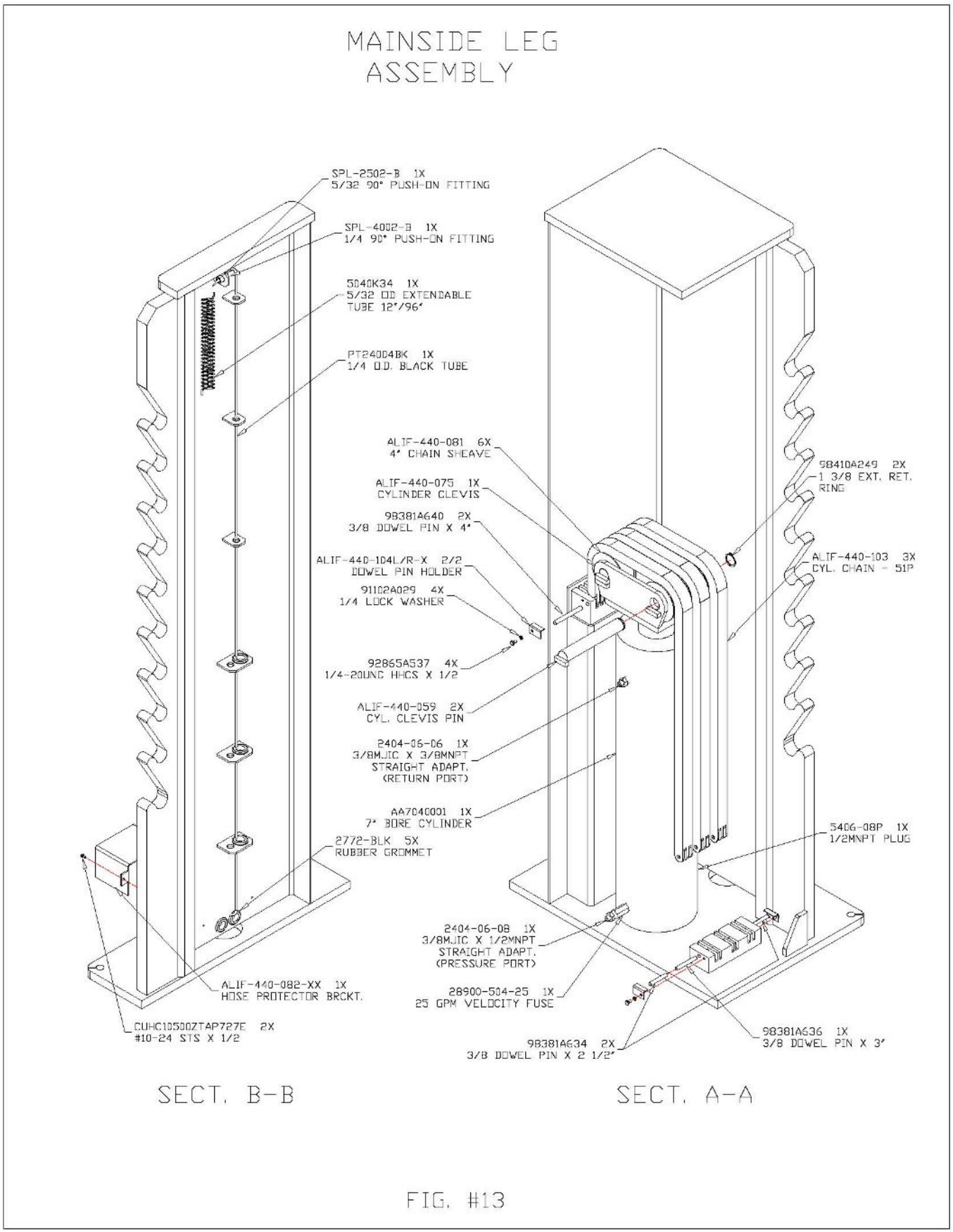
MAINSIDE LEG
ASSEMBLY
SPL-2502-B 1X
5/32 90° PUSH-ON FITTING
SPL-4002-B 1X
1/4 90° PUSH-ON FITTING
5040K34 1X
5/32 OD EXTENDABLE
TUBE 12"/96"
PT24004BK 1X
1/4 O.D. BLACK TUBE
ALIF-440-081 6X
4" CHAIN SHEAVE
ALIF-440-075 1X
CYLINDER CLEVIS
98381A640 2X
3/8 DOWEL PIN X 4"
ALIF-440-104L/R-X 2/2
DOWEL PIN HOLDER
91102A029 4X
1/4 LOCK WASHER
92865A537 4X
1/4-20UNC HHCS X 1/2
ALIF-440-059 2X
CYL. CLEVIS PIN
2404-06-06 1X
3/8MJIC X 3/8MNPT
STRAIGHT ADAPT.
(RETURN PORT)
AA7040001 1X
7" BORE CYLINDER
2772-BLK 5X
RUBBER GROMMET
ALIF-440-082-XX 1X
HOSE PROTECTOR BRCKT.
CUHC10500ZTAP727E 2X
#10-24 STS X 1/2
98410A249 2X
1 3/8 EXT. RET.
RING
ALIF-440-103 3X
CYL. CHAIN - 51P
5406-08P 1X
1/2MNPT PLUG
2404-06-08 1X
3/8MJIC X 1/2MNPT
STRAIGHT ADAPT.
(PRESSURE PORT)
28900-504-25 1X
25 GPM VELOCITY FUSE
98381A634 2X
3/8 DOWEL PIN X 2 1/2"
98381A636 1X
3/8 DOWEL PIN X 3"
SECT. B-B
SECT. A-A

FIG. #13

REVISIONS

2024/03/21 – UPDATED ADRESS AND COVER SHEET.
2024/10/02 – UPDATED COVER SHEET
2024/11/06 – ADDED MONTHLY MAINTENANCE.
2026/10/13 – updated power unit.